REV.	DATE	DESCRIPTION
NC	06/23/04	INITIAL RELEASE

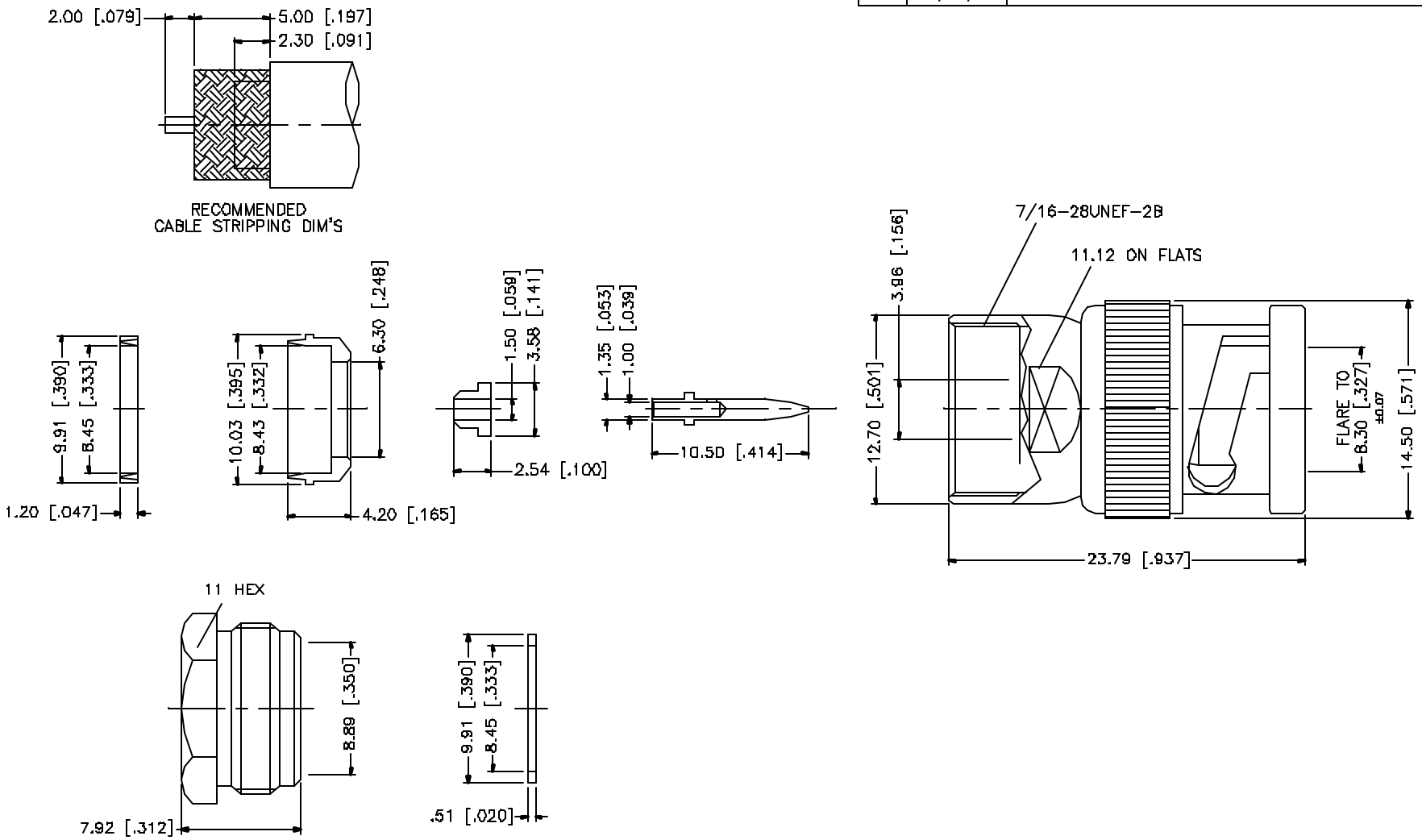

8	CLAMP NUT	BRASS	NICKEL	1
7	WASHER	BRASS	NICKEL	1
6	GASKET	SILICONE	RED	1
5	BRAID CLAMP	BRASS	NICKEL	1
4	INSULATOR	TEFLON	NATURAL	1
3	CONTACT PIN	BRASS	GOLD	1
2	INSULATOR	TEFLON	NATURAL	1
1	SHELL/BODY	BRASS	NICKEL	1
	DESCRIPTION	MATERIAL	FINISH	QTY

UNLESS OTHERWISE SPECIFIED DIMENSIONS ARE IN MILLIMETERS. DIMENSIONS IN [ ] ARE IN INCHES AND FOR CUSTOMER REFERENCE ONLY.

UNLESS OTHERWISE SPECIFIED TOLERANCES FOR MILLIMETERS ARE:
0.5 – 6mm ± 0.20mm
6 – 30mm ± 0.40mm
30 – 120mm ± 0.50mm

UNLESS OTHERWISE SPECIFIED TOLERANCES FOR INCHES ARE:
.020 – .315 = ± 0.007"
.315 – 1.180 = ± 0.015"
1.180 – 4.724 = ± 0.020"

DO NOT SCALE DRAWING

APPROVALS		DATE
DRAWN	G.R.S.	06/23/04
CHECKED		
ISSUED		
SHEET	1 OF 1	
CAD FILE	C:/112/112724.DWG	

Amphenol Connex

PART DESCRIPTION: BNC CLAMP PLUG (FOR RG-212/U)

PART NO.: 112724

DWG. NO.: 112724.DWG | REV.: NC | SIZE: A | SCALE: NA