NOTES:

1. MATERIALS AND FINISHES(IN MICRO-INCHES):

   BODY - ZINC ALLOY, MATTE TIN PLATING
   CONTACT - BeCu, GOLD PLATING
   SPRING FINGER CONTACT - BeCu, MATTE TIN PLATING
   CAP - BRASS, NICKEL PLATING
   INSULATOR - PTFE, NATURAL
   O-RING - HYDROGENATED NITRILE , GREEN
   O-RING - SILICONE RUBBER, RED
   HOUSING - PPE+PS, UNFILLED, COLOR & KEYING
   PER AMPHENOL SPEC. FAKRA-KEY-JACK
   (REFER TO TABLE BELOW FOR KEY CODE)
   FERRULE - COPPER, NICKEL PLATING
   HST - POLYOLEFIN, BLACK

2. ELECTRICAL:
   A. IMPEDANCE: 50 OHM (NOMINAL)
   B. FREQUENCY RANGE: DC - 3 GHz
   C. VSWR(RETURN LOSS): 1.200 (-20.8 dB), MAX.(DC-200 MHz)
   (MATED PAIR) 1.400 (-15.6 dB), MAX.(200 MHz-2.0 GHz)
   1.500 (-13.9 dB), MAX.(2.0-3.0 GHz)
   D. DIELECTRIC WITHSTANDING VOLTAGE: 800 VRMS, MIN.

3. MECHANICAL:
   A. DURABILITY: 100 CYCLES MIN.
   B. TEMPERATURE RANGE: -40° C TO 85° C
   C. ENVIRONMENTAL SEAL: IP67 (WHEN MATED)

4. PACKAGING:
   A. QUANTITY: TRAY PACK
   B. MARKING: TRAY TO BE MARKED
   "AMPHENOL RF, 3FA1ENXRJ-C04E3 (PER TABLE), AND DATE CODE"

5. CRIMPED FERRULE HEX CRIMP SIZE .213"
   CONTACT PIN TO SOLDER

6. ALL DIMENSIONS MECHANICAL & ELECTRICAL DESIGN COMPLY
   WITH DIN 72594-1 AND USCAR-18 SPEC.

7. CABLE ASSEMBLY INSTRUCTIONS PER 349-50883

THIRD ANGLE PROJ.

REVISIONS				
REV	DESCRIPTION	DATE	ECO	APPR
A	RELEASE TO MFG	07-Sept-17	05061	RD

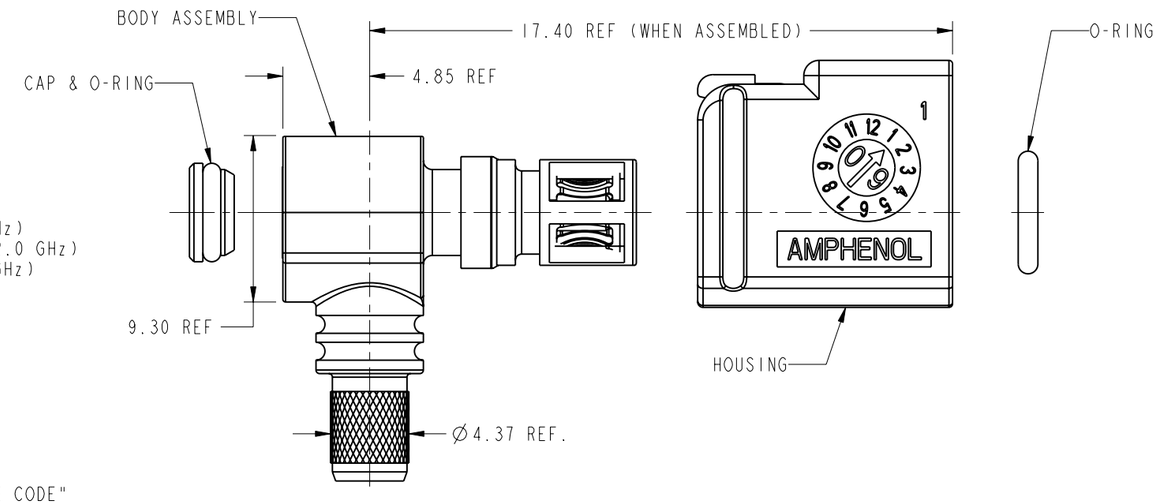

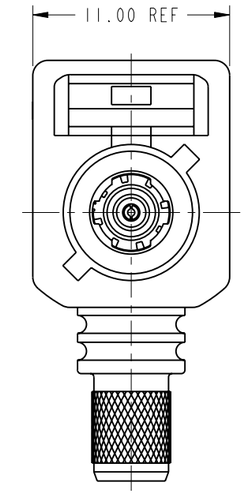

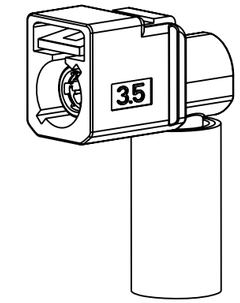

SCALE 1.500

FERRULE AND HEAT SHRINK TUBING
ARE NOT SHOWN IN THIS VIEW

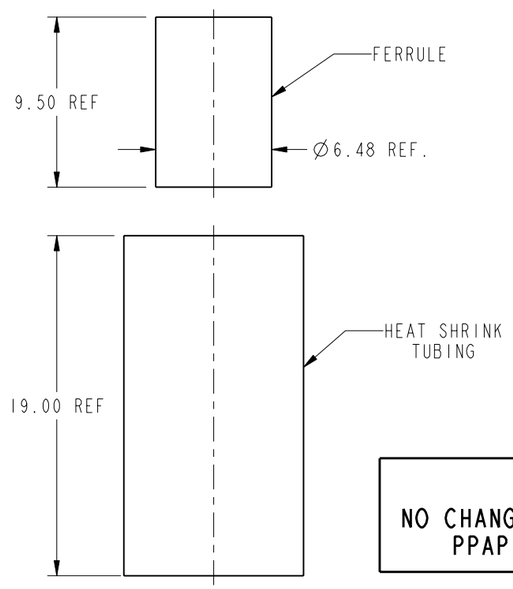

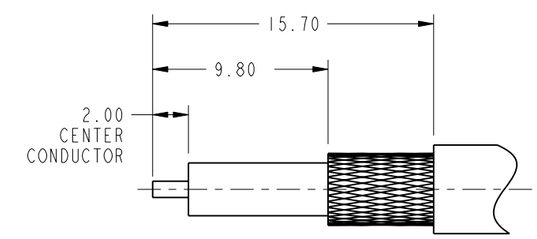

RECOMMENDED CABLE STRIPPING DIMENSIONS

CODING	DRAWING NO.	COLOR	RAL NO.
A	3FA1ENARJ-C04E3	JET BLACK	9005
B	3FA1ENBRJ-C04E3	CREAM WHITE	9001
C	3FA1ENCRJ-C04E3	SIGNAL BLUE	5005
D	3FA1ENDRJ-C04E3	CLARET VIOLET	4004
E	3FA1ENERJ-C04E3	LEAF GREEN	6002
F	3FA1ENFRJ-C04E3	NUT BROWN	8011
G	3FA1ENGRJ-C04E3	BLUE GREY	7031
H	3FA1ENHRJ-C04E3	HEATHER VIOLET	4003
I	3FA1ENIRJ-C04E3	BEIGE	1001
K	3FA1ENKRJ-C04E3	CURRY	1027
L	3FA1ENLRJ-C04E3	CARMINE RED	3002
M	3FA1ENMRJ-C04E3	PASTEL ORANGE	2003
N	3FA1ENNRJ-C04E3	PASTEL GREEN	6019
Z	3FA1ENZRJ-C04E3	WATER BLUE	5021

CONFIGURATION CONTROL:
NO CHANGES PERMITTED TO DRAWING WITHOUT
PPAP QUALIFIED CUSTOMER APPROVAL

CUSTOMER OUTLINE DRAWING

ALL OTHER SHEETS ARE FOR INTERNAL USE ONLY

UNLESS OTHERWISE SPECIFIED, DIMENSIONS ARE IN METRIC AND TOLERANCES ARE:

<0.5mm	0.5 - 6mm	6 - 30mm	30 - 120mm	ANGLES
± 0.05mm	±0.1mm	±0.2mm	± 0.3mm	±1°

NOTICE - These drawings, specifications, or other data (1) are, and remain the property of Amphenol corp. (2) must be returned upon request; and (3) are confidential and not to be disclosed to any person other than those to whom they are given by Amphenol Corp. the furnishing of these drawings, specifications, or other data by Amphenol Corp., or to any other person to anyone for any purpose is not to be regarded by implication or otherwise in any manner licensing, granting rights to permitting such holder or any other person to manufacture, use or sell any product, process or design, patented or otherwise, that may in any way be related to or disclosed by said drawings, specifications, or other data.

MATERIAL
SEE NOTES

REFERENCE
EAR #

CONFIGURATION LEVEL: In Work

FINISH

DRAWN MADHAN G	DATE 28-Apr-16	
ENGINEER E.WANKOFF	DATE 28-Apr-16	
APPROVED S.HSIEH	DATE 19-Sep-17	
CAD FILE		

TITLE
FAKRA R/A JACK, GEN 3.5,
CABLE GROUP C04,
IP67 SEALED

SCALE: 3.0:1.0 SHEET 2 OF 2

DWG SIZE B REV A

Amphenol RF
www.amphenolrf.com

DRAWING NO. 3FA1ENXRJ-C04E3
ITEM NO. 3FA1ENXRJ-C04E3
PART NO. 3FA1ENXRJ-C04E3