REV.	DATE	DESCRIPTION
NC	01/11/05	INITIAL RELEASE

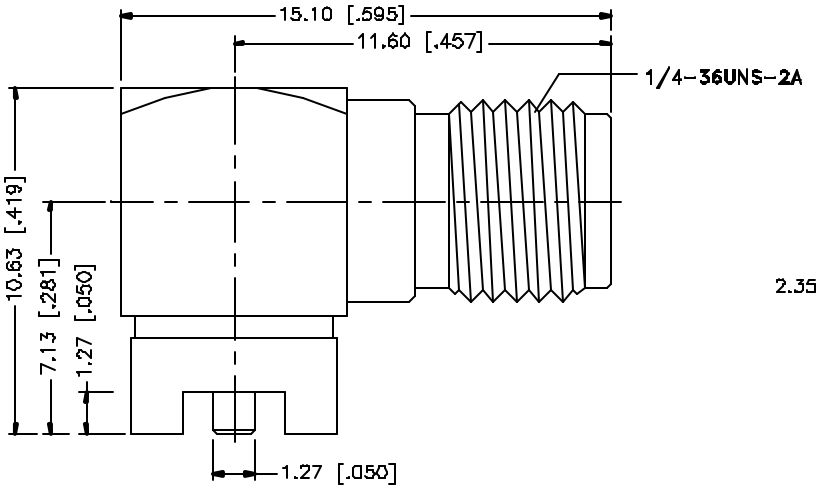

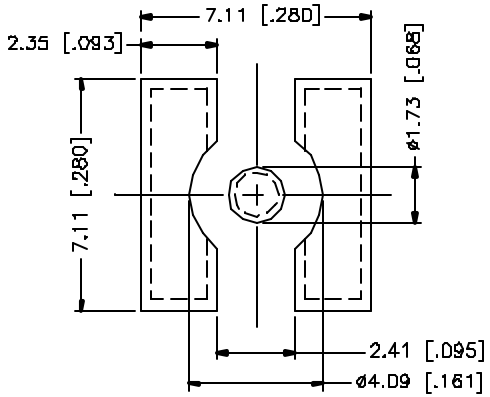

P.C.B. LAYOUT

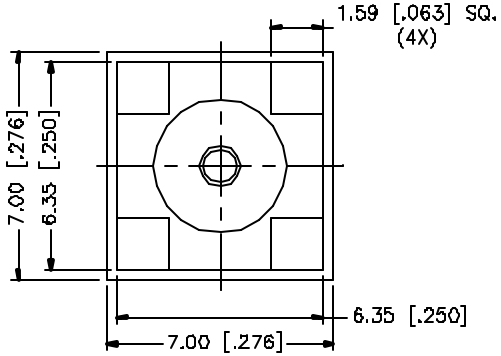

8				
7				
6				
5				
4				
3	CONTACT PIN	BER. COPPER	GOLD	1
2	INSULATOR	TEFLON	NATURAL	1
1	HOUSING/BODY	BRASS	GOLD	1
	DESCRIPTION	MATERIAL	FINISH	QTY

UNLESS OTHERWISE SPECIFIED DIMENSIONS ARE IN MILLIMETERS. DIMENSIONS IN [ ] ARE IN INCHES AND FOR CUSTOMER REFERENCE ONLY.

UNLESS OTHERWISE SPECIFIED TOLERANCES FOR MILLIMETERS ARE:

0.5 – 6mm ± 0.20mm
6 – 30mm ± 0.40mm
30 – 120mm ± 0.50mm

UNLESS OTHERWISE SPECIFIED TOLERANCES FOR INCHES ARE:

.020 – .315 = ± 0.007"
.315 – 1.180 = ± 0.015"
1.180 – 4.724 = ± 0.020"

DO NOT SCALE DRAWING

APPROVALS		DATE
DRAWN	G.R.S.	01/11/05
CHECKED		
ISSUED		
SHEET	1 OF 1	

CAD FILE C:/132/132136-11.DWG

Amphenol Connex

PART DESCRIPTION: SMA R/A P.C. SURFACE MOUNT JACK

PART NO. 132136-11

DWG. NO.	REV.	SIZE	SCALE
132136-11.DWG	NC	A	NA