| REV. | DATE | ECR NO. | DESCRIPTION |
|---|---|---|---|
| NC | 11/11/08 | – | INITIAL RELEASE |
| A | 11/18/08 | – | ADD END VIEW TO SHOW DUAL FLATS [5.84] |

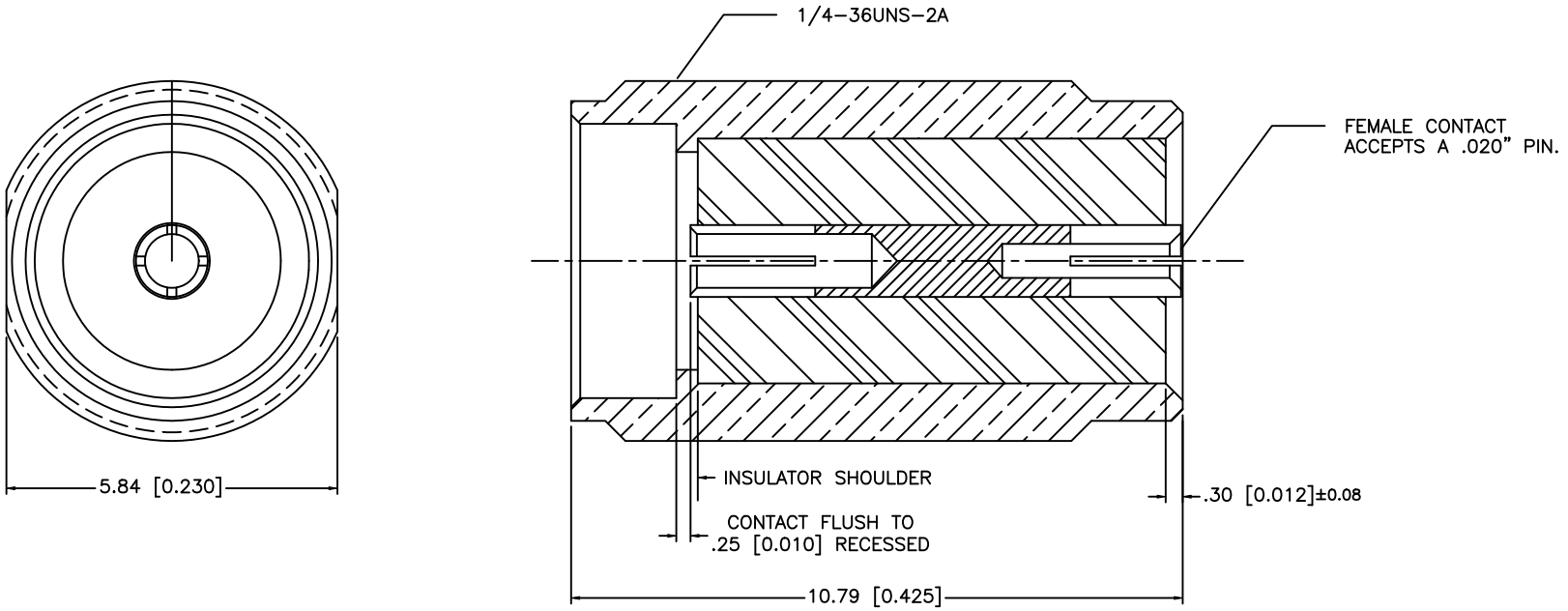


NOTES:

1. MATING CHARACTERISTICS: 3 LBS. MAX. INSERTION FOR ø0.94 PIN
   1 OZ. MIN. WITHDRAWL FOR ø0.090 PIN

2. MATING CHARACTERISTICS: 6 LBS. MAX. INSERTION FOR ø.220 PIN WITH 45° CHAMFER. 3.05 MIN. INSERTION DEPTH.
   1 OZ. MIN. WITHDRAWL FOR ø0.050 PIN

3. CONTACT MUST WITHSTAND A 3 LBS. PUSH–OUT FORCE FROM THE MATING FACE OF CONNECTOR.

| | DESCRIPTION | MATERIAL | FINISH | QTY |
|---|---|---|---|---|
| 8 | | | | |
| 7 | | | | |
| 6 | | | | |
| 5 | | | | |
| 4 | | | | |
| 3 | CONTACT PIN | BER. COPPER | GOLD | 1 |
| 2 | INSULATOR | PTFE | NATURAL | 1 |
| 1 | BODY | BRASS | GOLD | 1 |

UNLESS OTHERWISE SPECIFIED DIMENSIONS ARE IN MILLIMETERS. DIMENSIONS IN [ ] ARE IN INCHES AND FOR CUSTOMER REFERANCE ONLY.

UNLESS OTHERWISE SPECIFIED TOLERANCES FOR MILLIMETERS ARE:
0.5 – 8mm ± 0.20mm
8 – 30mm ± 0.40mm
30 – 120mm ± 0.50mm

UNLESS OTHERWISE SPECIFIED TOLERANCES FOR INCHES ARE:
.020 – .315 = ± 0.007"
.315 – 1.180 = ± 0.015"
1.180 – 4.724 = ± 0.020"

DO NOT SCALE DRAWING

| APPROVALS | | DATE |
|---|---|---|
| DRAWN | GRS | 11/18/08 |
| CHECKED | | |
| ISSUED | | |
| SHEET | 1 OF 1 | |

CAD FILE C:/132/132386.DWG

Amphenol Connex

PART DESCRIPTION: SMA RECEPTACLE

PART NO. 132386

DWG. NO. 132386.DWG | REV. A | SIZE A | SCALE NA