REV.	DATE	DESCRIPTION
NC	07/14/02	INITIAL RELEASE

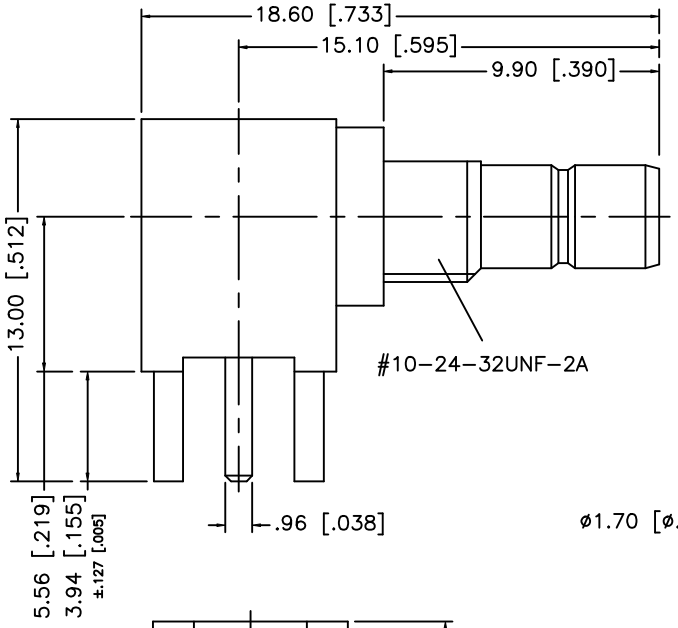

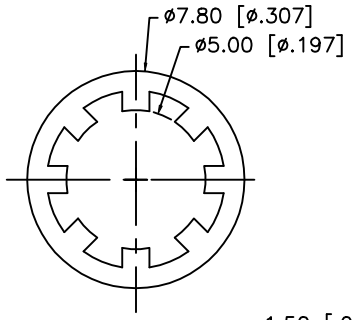

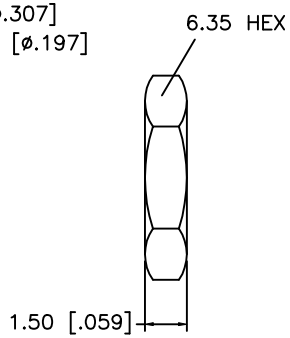

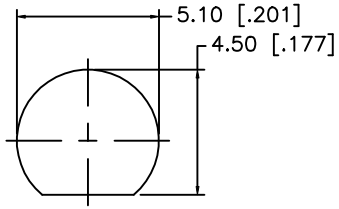

RECOMMENDED MOUNTING HOLE

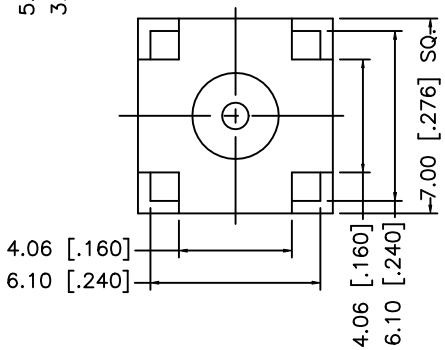

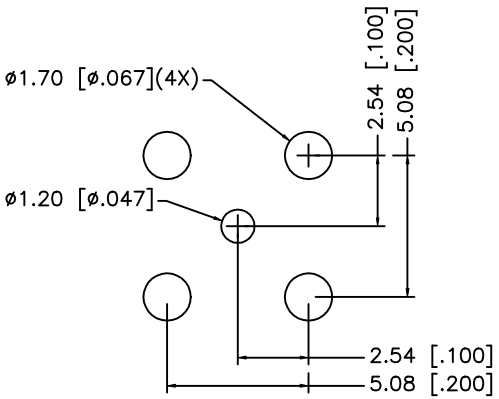

PCB MOUNTING HOLES

NOTE:

1. MAX. PANEL THICKNESS = 1.36mm

8			
7			
6			
5	HEX NUT	BRASS	GOLD
4	LOCK WASHER	BRASS	GOLD
3	CONTACT PIN	BRASS	GOLD
2	INSULATOR	TEFLON	NATURAL
1	BODY	BRASS	GOLD
	DESCRIPTION	MATERIAL	FINISH

UNLESS OTHERWISE SPECIFIED DIMENSIONS ARE IN MILLIMETERS

DIMENSIONS IN [ ] ARE IN INCHES FOR CUSTOMER REFERANCE ONLY

UNLESS OTHERWISE SPECIFIED TOLERANCES FOR INCHES ARE:

.XXX = ± 0.005"
.XX = ± 0.010"
.X = ± 0.020"

DO NOT SCALE DRAWING

APPROVALS		DATE
DRAWN	G.R.S.	07/14/02
CHECKED		
ISSUED		

Amphenol - Connex
CONNECTOR CORPORATION

TITLE: SMB R/A P.C. MOUNT JACK

SIZE	FSCM NO.	DWG. NO.	REV.
A	99001	142317.DWG	NC

SCALE	PART NO.	SHEET
NA	142317	1 OF 1