21 JUN 1999 23:53 NO.640 P.18/22

REVISIONS		
ISS	ZONE	DESCRIPTION\PER REQUEST\DATE

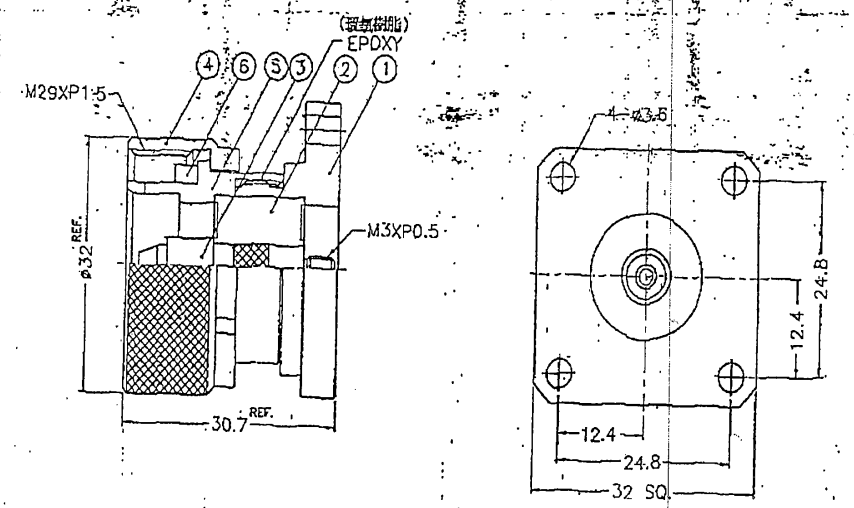

NOTES: FINISH (PLATING THICKNESS IN MICRO-INCHES)
1. BRASS PER QQ-B-626
2. SILVER PL 120 MIN. THICK OVER COPPER STRIKE
3. SILVER PL 200 MIN. THICK OVER COPPER STRIKE
4. TEFLON MIL-P-19468

NO.	DESCRIPTION	MATERIAL	FINISH	Q'TY	DRAWING NO.
6	GASKET	SILICONE	RED	1	
5	CONTACT BODY	NOTE 1	NOTE 2	1	
4	SHELL	NOTE 1	NOTE 2	1	
3	CONTACT PIN	NOTE 1	NOTE 3	1	
2	INSULATOR	NOTE 4	NATURAL	1	
1	HOUSING	NOTE 1	NOTE 2	1	

DIMENSIONS ARE IN MILLIMETERS
UNLESS OTHERWISE SPECIFIED TOLERANCES
0.5-6 = ±0.2
6-30 = ±0.4
30-120 = ±0.6
120-315 = ±1
315-1000 = ±1.6
1000-2000 = ±2.4

SCALE 1.5/1 ISSUE 1

PART NO. 272133
APPROVED [signature] DATE 06-07-99
CHECKED [signature] DATE 06-07-99
DRAWN KOLI DATE 06-07-99

KAI JACK INDUSTRIAL CO., LTD.
TAINAN TAIWAN R.O.C.

TITLE 7/16 PANEL RECEPTACLE PLUG WITH THREADED STUD M3

DRAWING NO 272133.

FILE NO.