NOTES:

1. MATERIALS AND FINISHES:
   BODY - BRASS, NICKEL PLATING
   CONTACTS - ZINC ALLOY & PHOSPHOR BRONZE, GOLD PLATING
   INSULATORS - PTFE, NATURAL.
   SHELL - ZINC ALLOY, NICKEL PLATING
2. ELECTRICAL:
   A. IMPEDANCE: 50 OHM
   B. FREQUENCY RANGE: DC - 4 GHz
   C. DIELECTRIC WITHSTANDING VOLTAGE:1500 VRMS, MIN.

3. MECHANICAL:
   A. DURABILITY : 500 CYCLES MIN
   B. TEMPERATURE RANGE : -65°C TO +165°C

4. WHEN CRIMP CONTACT PIN TO CABLE, CRIMP WITH AMPHENOL TOOL 227-944(M22520/5-01) AND DIE SET 227-1221-13 CAVITY 'B' (M22520/5-13 CLOSURE 'B')

5. WHEN CRIMP FERRULE TO CABLE, CRIMP WITH AMPHENOL TOOL 227-944(M22520/5-01) AND DIE SET 227-1227-13 CAVITY 'A' (M22520/5-13 CLOSURE 'A').

REVISIONS				
REV	DESCRIPTION	DATE	ECN	BY
B	SEE SHEET 1	04-Mar-08	--	ANGELA.W
U	REDRAWN TO UPDATE FORMAT	06-JAN-09	47239	SH
V	FERRULE WAS CHANGED \ RD-DM09020301K	07-FEB-09		SH
W	SHELL WAS CHANGED	20-Sep-22	15791	SH

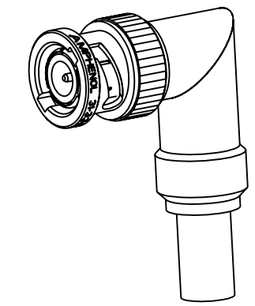

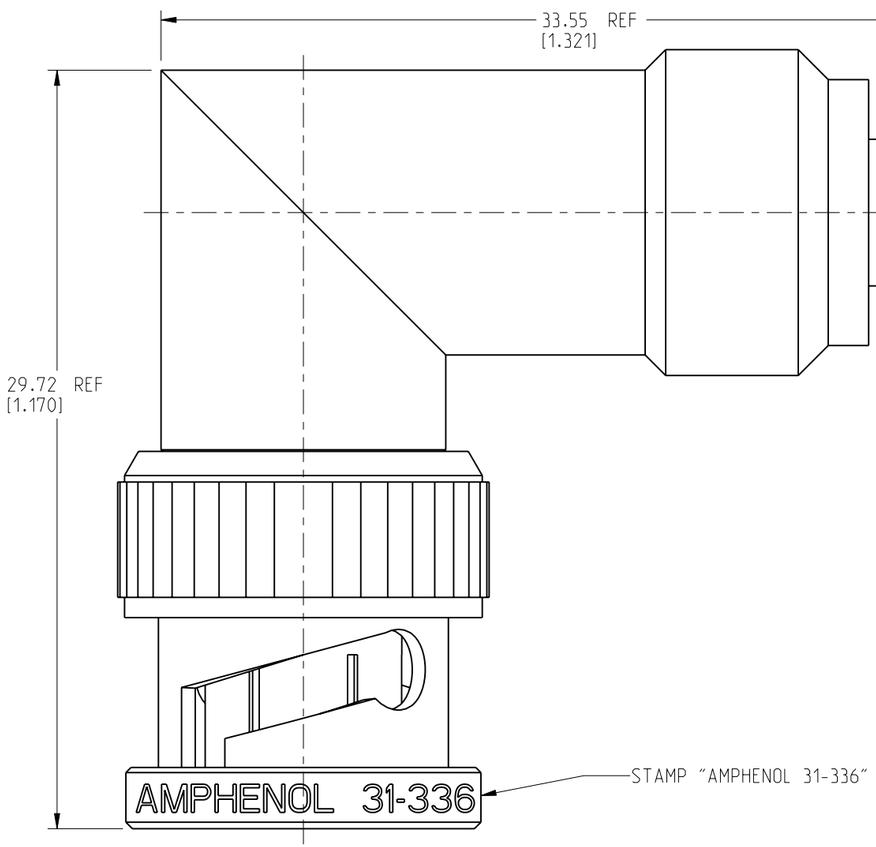

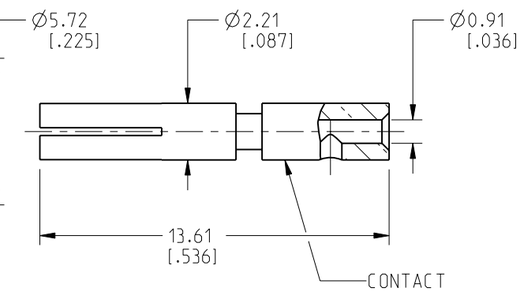

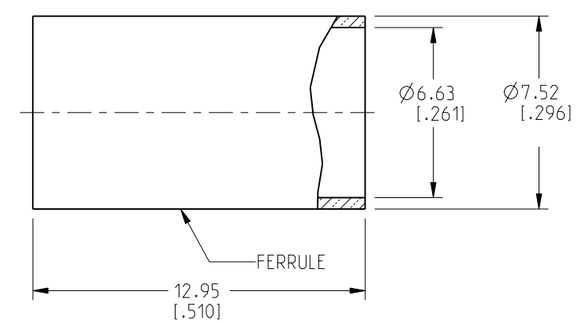

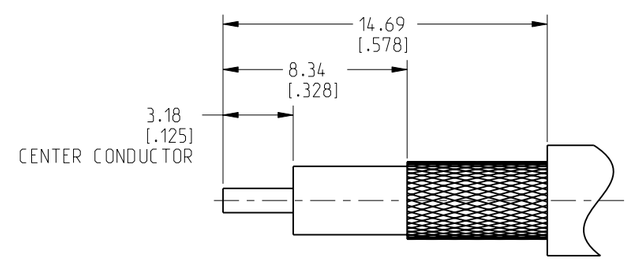

RECOMMENDED CABLE STRIPPING DIMENSIONS

CUSTOMER OUTLINE DRAWING

ALL OTHER SHEETS ARE FOR INTERNAL USE ONLY

NOTICE: These drawings, specifications, or other data (1) are, and remain the property of Amphenol corp. (2) must be returned upon request; and (3) are confidential and not to be disclosed to any person other than those to whom they are given by Amphenol Corp. The furnishing of these drawings, specifications, or other data by Amphenol Corp., or to any other person to anyone for any purpose is not to be regarded by implication or otherwise in any manner licensing, granting rights to permitting such holder or any other person to manufacture, use or sell any product, process or design, patented or otherwise, that may in any way be related to or disclosed by said drawings, specifications, or other data.

THIRD ANGLE PROJ. | REFERENCE | EAR# EAR #

UNLESS OTHERWISE SPECIFIED
DIMENSIONS ARE METRIC [INCHES] AND TOLERANCES ARE:

<0.5mm = ±0.05mm	[<0.020 = ±0.002]
0.5 - 6mm = ±0.1mm	[0.020 - 0.236 = ±0.004]
>6.00 - 30mm = ±0.2mm	[>0.236 - 1.181 = ±0.008]
>30.00 - 120mm = ±0.3mm	[>1.181 - 4.725 = ±0.012]

ANGLES = ±1°

MATERIAL: SEE NOTES

ENGR.1: ERVING | ENGR.2: | DATE: 31-Aug-22

TITLE: BNC R/A PLUG MIL-CRIMP(FOR RG-59/U AND 20GA RG59 CABLE)

SHEET NO. 2 OF 2 | SCALE: 4.3:1.0

Amphenol RF

SIZE: B | DRAWING NO. 31-336 | ITEM NO. 31-336 | PART NO. 31-336 | REV: W