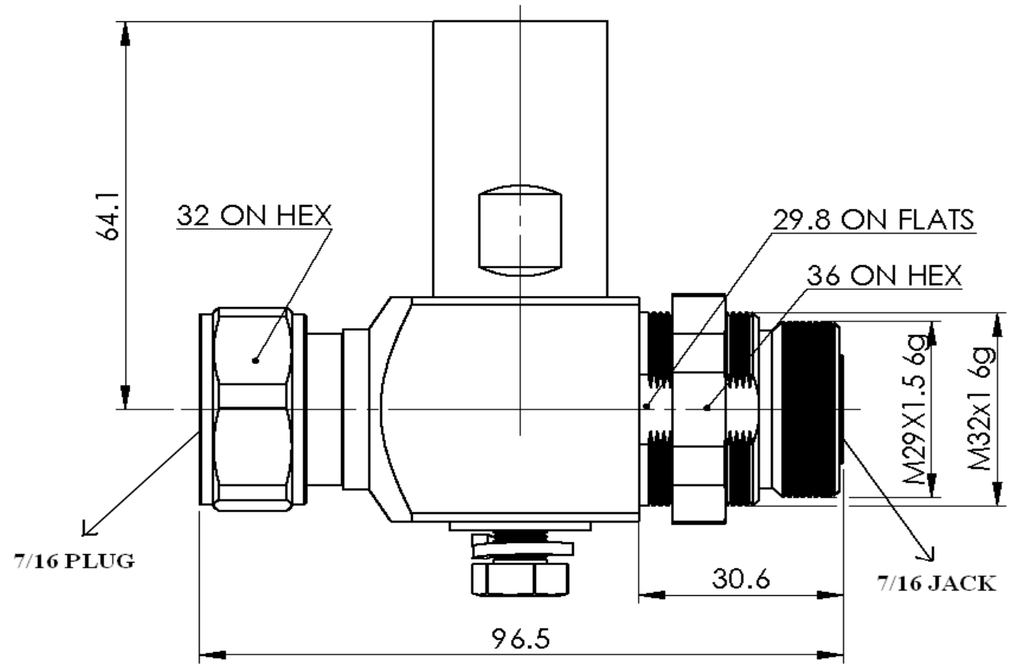

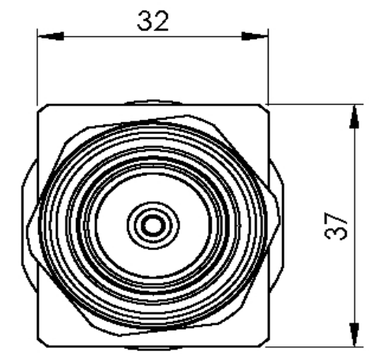

STUD & CAP NOT SHOWN ON VIEW

I、Electric Performance

Impedance（Ω）	50
Frequency range	650-2200MHz
Return loss(dB)	≤ -24
Insertion loss（dB）	≤ 0.1
PIM (dBc)	≤ -150 (900MHz)
Avarge power (W)	500
Peak power(kW)	25
Impulse discharge current	50kA multiple(Wave form 8/20us)

II、Mechanical Performance

Retention	≥5.88N
Nut torque	25N.m
Mechanical wear（hypo-）	500

III、 Material Data

Component	Material	Plating
Outer conductor	Brass	Copper tin-zinc 2μm
Inner conductor	Spring copper	Ag 5μm
Nut	Brass	Copper tin-zinc 2μm
Insulation	PTFE	
O-ring	Silicone rubber	

Ⅳ、Environment

Temp.range	-40℃~+85℃
Weather standard	IEC 60068 40 / 085/ 21
Thermal shock	US MIL-STD 202,Meth.107,Cond.B
Vibration	US MIL-STD 202,Meth.204,Cond.B
Shock	US MIL-STD 202,Meth.213,Cond.I
Weaterproofing standard	IP67
ROHS compliant	

CUSTOMER OUTLINE DRAWING

Amphenol RF
Danbury, CT, USA
Tainan, Taiwan
Shenzhen, China
www.amphenolrf.com

REV	DESCRIPTION	DATE	ECO		APPROVAL	DATE
A	RELEASE TO MFG	1/26/2012	48941	DRAWN BY	JIA YONG LI	1/25/2012
				ENGINEER	JIA YONG LI	1/25/2012
REVISIONS				MANAGER	K. CAPOZZI	1/25/2012

THIS DRAWING CONTAINS INFORMATION WHICH IS THE PROPRIETARTY PROPERTY OF AMPHENOL CORPORATION. THIS DRAWING IS CONFIDENTIAL AND ITS CONTENTS MAY NOT BE DISCLOSED WITHOUT THE PRIOR WRITTEN CONSENT OF AMPHENOL CORPORATION.

REFERENCE:

TITLE: SURGE ARRESTOR 7/16 PLUG TO 7/16 JACK

CAD FILE: I:\716\716-225

CODE ID:	74868		
SCALE:	NONE	SHEET:	2 of 2
Drawing No.		Rev	
716-225		A	