NOTES:
1. MATERIALS AND FINISHES:
   BODY - BRASS, GOLD PLATING (.000030" THICK OVER NICKEL .000080" MIN.)
   CONTACT - BeCu, GOLD PLATING (.000030" THICK OVER NICKEL .000080" MIN.)
   INSULATOR - PTFE, NATURAL
2. ELECTRICAL:
   A. IMPEDANCE: 75 OHMS, NOMINAL
   B. FREQUENCY RANGE: DC - 3 GHz
   C. RETURN LOSS: -20 dB MAX. @ DC - 1.5 GHz
   -15 dB MAX. @ 1.5 - 3 GHz
3. MECHANICAL:
   A. DURABILITY: 500 CYCLES MIN.
   B. TEMPERATURE RANGE: -65°C TO +165°C
   C. MATING PIN DIAMETER: Ø.019"[0.48mm]/.021"[0.53mm]
4. PACKAGING:
   A. QUANTITY: SINGLE PACK
   B. MARKING: BAG TO BE MARKED
   "AMPHENOL, 919-297J-71A, AND DATE CODE"
5. REMOVED PER REV C

THIRD ANGLE PROJ.

REVISIONS

| REV | DESCRIPTION | DATE | ECO | APPR |
|---|---|---|---|---|
| A | RELEASE TO MFG. | 19-Mar-11 | 48485 | FW |
| B | SEE SHEET 1/RD-DM14101001M3 | 25-Oct-14 | 50194 | SH |
| C | REMOVED "NOT DESIGNED FOR REFLOW" NOTE 5 | 10-Dec-15 | 50898 | SH |

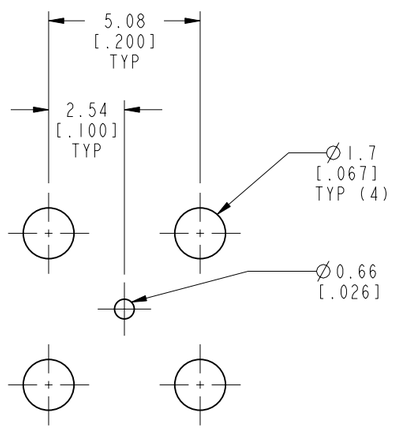


RECOMMENDED PCB HOLE DIMENSIONS
SCALE 5.000

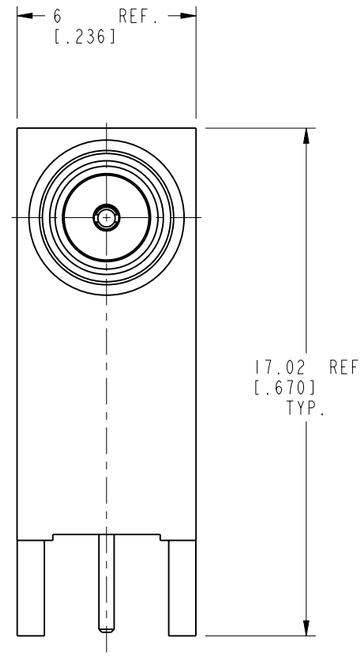


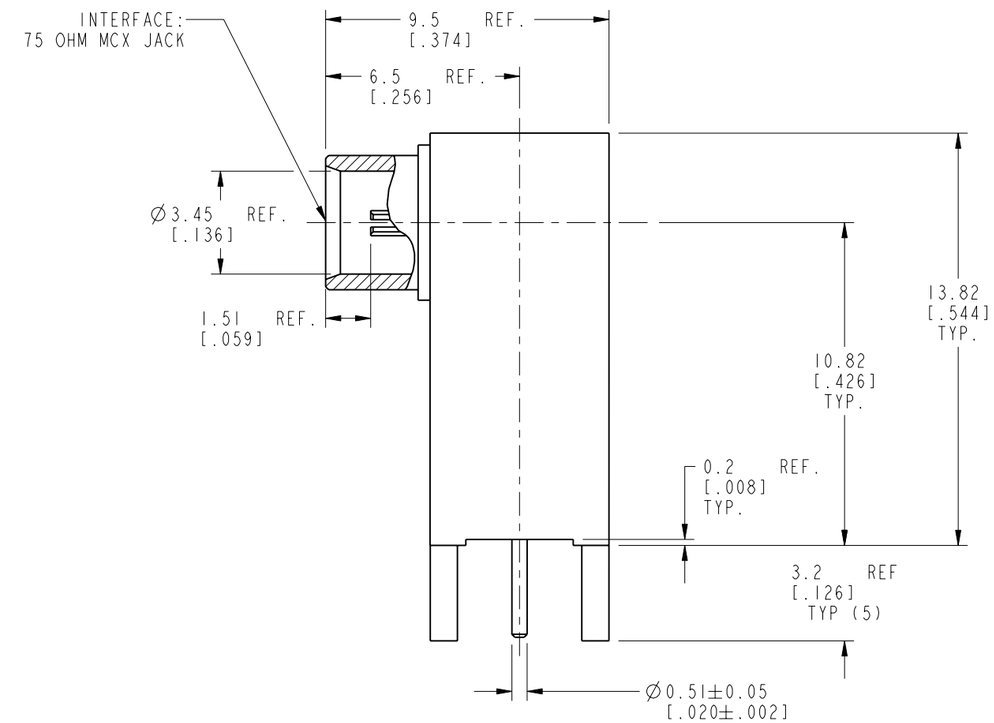


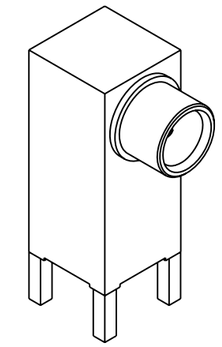

SCALE 3.000

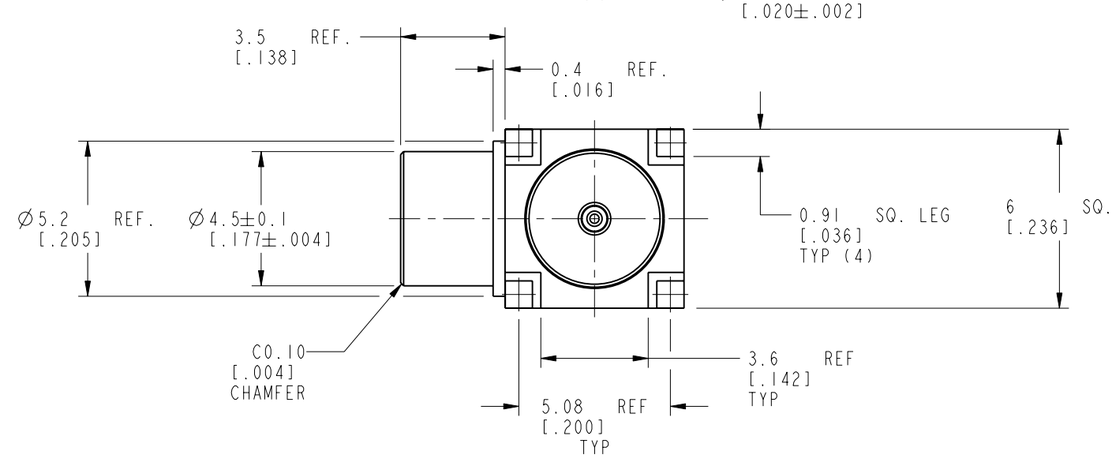


# CUSTOMER OUTLINE DRAWING

ALL OTHER SHEETS ARE FOR INTERNAL USE ONLY

UNLESS OTHERWISE SPECIFIED, DIMENSIONS ARE IN METRIC AND TOLERANCES ARE:

| <0.5mm | 0.5 - 6mm | 6 - 30mm | 30 - 120mm | ANGLES |
|---|---|---|---|---|
| ± 0.05mm | ±0.1mm | ±0.2mm | ± 0.3mm | ±1° |

NOTICE - These drawings, specifications, or other data (1) are, and remain the property of Amphenol corp. (2) must be returned upon requiest; and (3) are confidential and not to be disclosed to any person other than those to whom they are given by Amphenol Corp. the funishing of these drawings, specifications, or other data by Amphenol Corp., or to any other person to anyone for any purpose is not to be regarded by implicatioin or otherwise in any manner licensing, granting rights to permitting such holder or any other sperson to manufacture, use or sell any product, process or design, patented or otherwsie, that may in any way be related to or disclosed by said drawings, specifications, or other data.

MATERIAL

REFERENCE
EAR # 4346 AND 919-236J-71A

CONFIGURATION LEVEL:

FINISH

| | |
|---|---|
| DRAWN M.DONG | DATE 21-Oct-14 |
| ENGINEER JIA YONG LI | DATE 19-Nov-10 |
| APPROVED S.HSIEH | DATE 21-Apr-11 |
| CAD FILE | |

TITLE
75 OHM MCX R/A JACK
PCB THRU HOLE

SCALE: 8.0:1.0 | SHEET 2 OF 2

DWG SIZE B | REV C

Amphenol RF
www.amphenolrf.com

DRAWING NO. 919-297J-71A
ITEM NO. 919-297J-71A
PART NO.919-297J-71A