NOTES:

1. MATERIALS AND FINISHES:
   - COVER - BRASS, NICKEL PLATING
   - FERRULE - BRASS, NICKEL PLATING
   - RETAINER RING - BERYLLIUM COPPER, NATURAL
   - HOUSING - ZINC ALLOY, NICKEL PLATING
   - BODY - BRASS, NICKEL PLATING
   - CONTACT - BRASS, GOLD PLATING
   - INSULATOR - PTFE, NATURAL
2. ELECTRICAL:
   - A. IMPEDANCE: 50 OHM
   - B. FREQUENCY RANGE: 0-4 GHz
   - C. VSWR (RETURN LOSS): 1.500 (-13.979 dB) MAX.
   - D. D.W.V: 1000 VRMS, MIN.
3. MECHANICAL:
   - A. DURABILITY: 500 CYCLES MIN.
   - B. TEMPERATURE RANGE: -65°C TO +165°C
4. CRIMPED FERRULE HEX CRIMP SIZE .128"
5. CONTACT PIN TO SOLDER.
6. SHOWS CABLE ENTRY DIMENSIONS.

THIRD ANGLE PROJ.

REVISIONS

| REV | DESCRIPTION | DATE | ECO | APPR |
|---|---|---|---|---|
| NC | INITIAL RELEASE | 31-Jan-97 | ----- | GRS |
| A | UPDATE DRAWING FORMAT | 25-Jun-07 | ----- | GRS |
| C | SYNC, THE HOUSING WAS RE-TOOLED\RD-DM1704270IM | 05-May-17 | 03587 | SH |

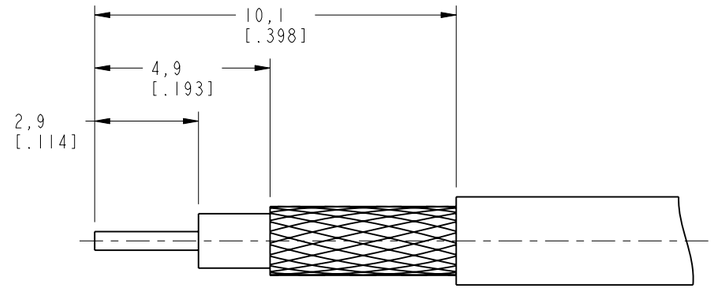


RECOMMENDED
CABLE STRIPPING DIM'S

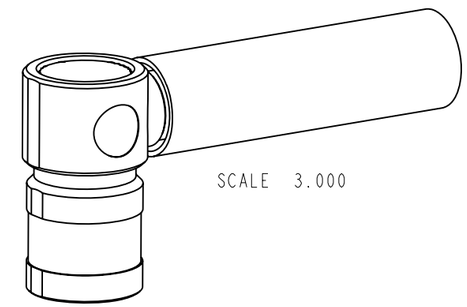

SCALE 3.000

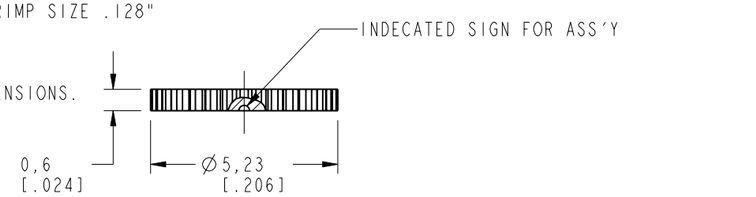


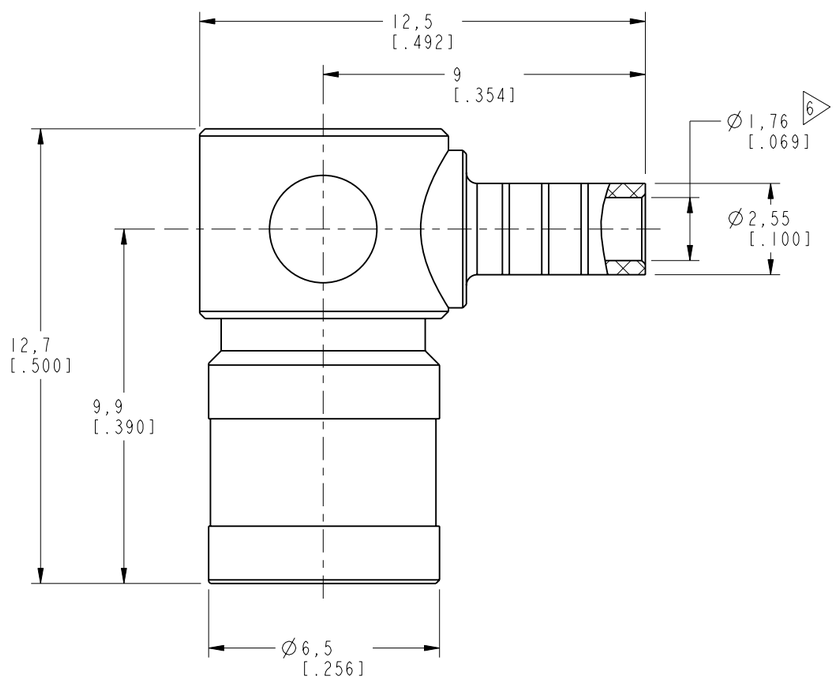


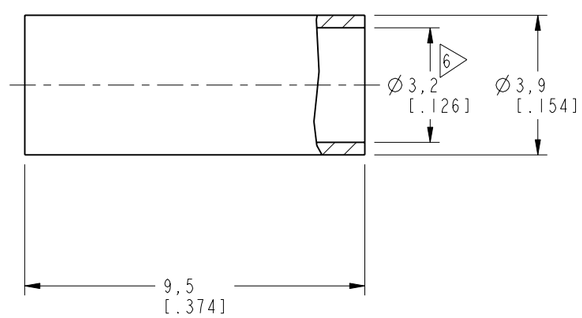


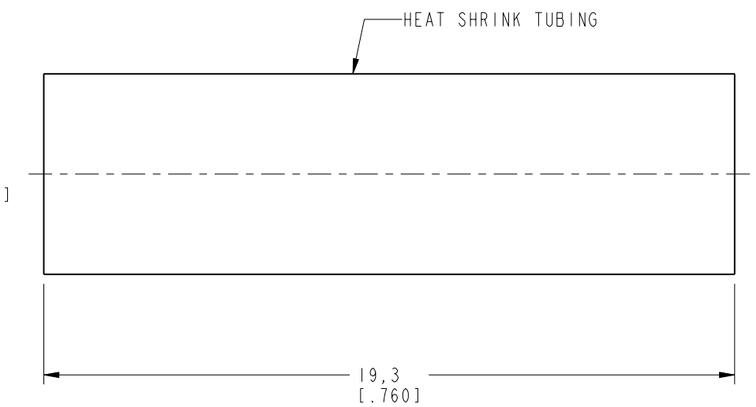


**CUSTOMER OUTLINE DRAWING**

ALL OTHER SHEETS ARE FOR INTERNAL USE ONLY

UNLESS OTHERWISE SPECIFIED, DIMENSIONS ARE IN METRIC AND TOLERANCES ARE:

| <0.5mm | 0.5 - 6mm | 6 - 30mm | 30 - 120mm | ANGLES |
|---|---|---|---|---|
| ± 0.05mm | ±0.1mm | ±0.2mm | ± 0.3mm | ±1° |

NOTICE - These drawings, specifications, or other data (1) are, and remain the property of Amphenol corp. (2) must be returned upon request; and (3) are confidential and not to be disclosed to any person other than those to whom they are given by Amphenol Corp. the furnishing of these drawings, specifications, or other data by Amphenol Corp., or to any other person to anyone for any purpose is not to be regarded by implication or otherwise in any manner licensing, granting rights to permitting such holder or any other person to manufacture, use or sell any product, process or design, patented or otherwise, that may in any way be related to or disclosed by said drawings, specifications, or other data.

MATERIAL
-

REFERENCE
AND
CONFIGURATION LEVEL: In Work

FINISH

| | | | |
|---|---|---|---|
| DRAWN M.ZHANG | DATE 05-May-17 | TITLE SMB RP R/A CRIMP PLUG (FOR RG-174/U,188A/U 316/U CABLE) | Amphenol RF |
| ENGINEER C.WANG | DATE 25-Feb-08 | | www.amphenolrf.com |
| APPROVED S.HSIEH | DATE 05-May-17 | SCALE: 6.0:1.0 SHEET 2 OF 2 | DRAWING NO. RSMB6112D1-013-NT30G-50 |
| CAD FILE | | DWG SIZE B / REV C | ITEM NO. 626112AAC36NC5F |
| | | | PART NO. 142193RP |