REV.	DATE	ECR NO.	DESCRIPTION
A	09/09/09	----	RELEASE TO MFG.

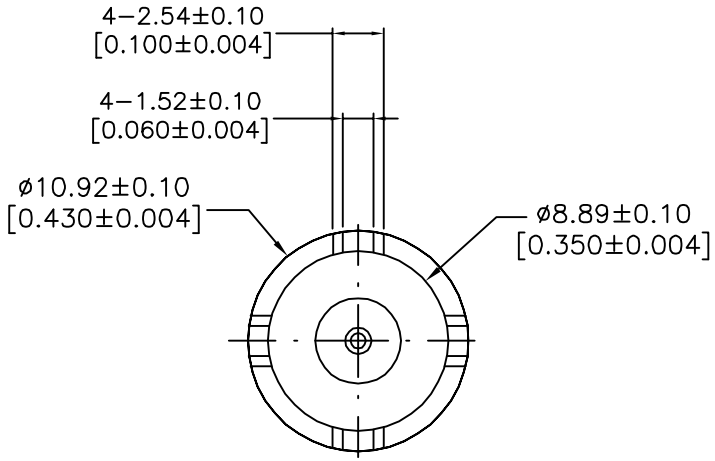

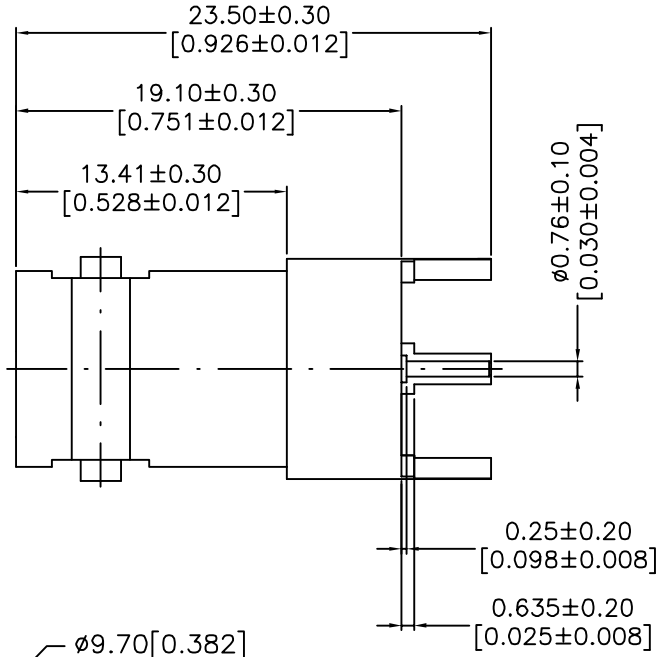

THE CONNECTOR INTERFACE MEETS MIL−STD−348.

ELECTRICAL CHARACTERISTICS
CHARACTERISTIC IMPEDANCE : 75Ω;
WORKING VOLTAGE : 500V;
FREQUENCY RANGE : 0−2GHZ;
DIELECTRIC WITHSTANDING VOLTAGE : 1500V RMS;
CONTACT RESISTANCE : CENTER CONTACT : ≤1.5MΩ;
OUTER CONTACT : ≤1.0MΩ;
INSULATION RESISTANCE : ≥5000MΩ;
DURABILITY : 500 CYCLES

MECHANICAL CHARACTERISTICS:
TEMPERATURE : −55°C TO +85°C;

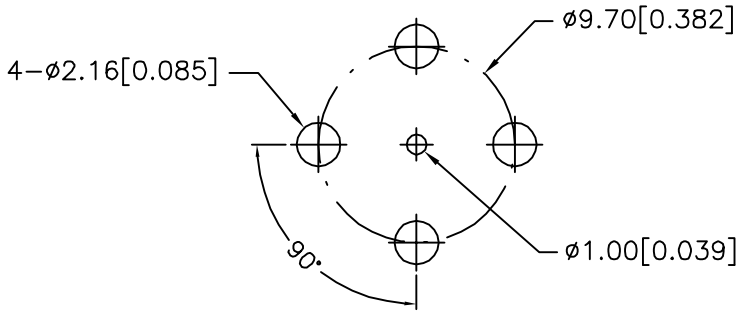

RECOMMENDED MOUNTING HOLE

3	BODY	BRASS	NICKEL	1
2	INSULATOR	PTFE		1
1	CENTER CONTACT	PHOSPHOR BRONZE	GOLD	1
	DESCRIPTION	MATERIAL	FINISH	QTY

UNLESS OTHERWISE SPECIFIED DIMENSIONS ARE IN MILLIMETERS. DIMENSIONS IN [ ] ARE IN INCHES AND FOR CUSTOMER REFERANCE ONLY.

UNLESS OTHERWISE SPECIFIED TOLERANCES FOR MILLIMETERS ARE:
0.5 − 8mm ± 0.20mm
8 − 30mm ± 0.40mm
30 − 120mm ± 0.50mm

UNLESS OTHERWISE SPECIFIED TOLERANCES FOR INCHES ARE:
.020 − .315 = ± 0.007"
.315 − 1.180 = ± 0.015"
1.180 − 4.724 = ± 0.020"

DO NOT SCALE DRAWING

APPROVALS		DATE
DRAWN	CLEMENT	09/09/09
CHECKED		
ISSUED		
SHEET	1 OF 1	
CAD FILE	C:/112/112772.DWG	

AMPHENOL CONNEX

PART DESCRIPTION
BNC VERTICAL PCB REC, 75 OHM

PART NO. 112772

DWG. NO.	REV.	SIZE	SCALE
112772.DWG	A	A	NA