REV.	DATE	ECR NO	DESCRIPTION
A	06/24/08	--	RELEASE TO MFG.
B	08/26/10	2088	UPDATED DESCRIPTION

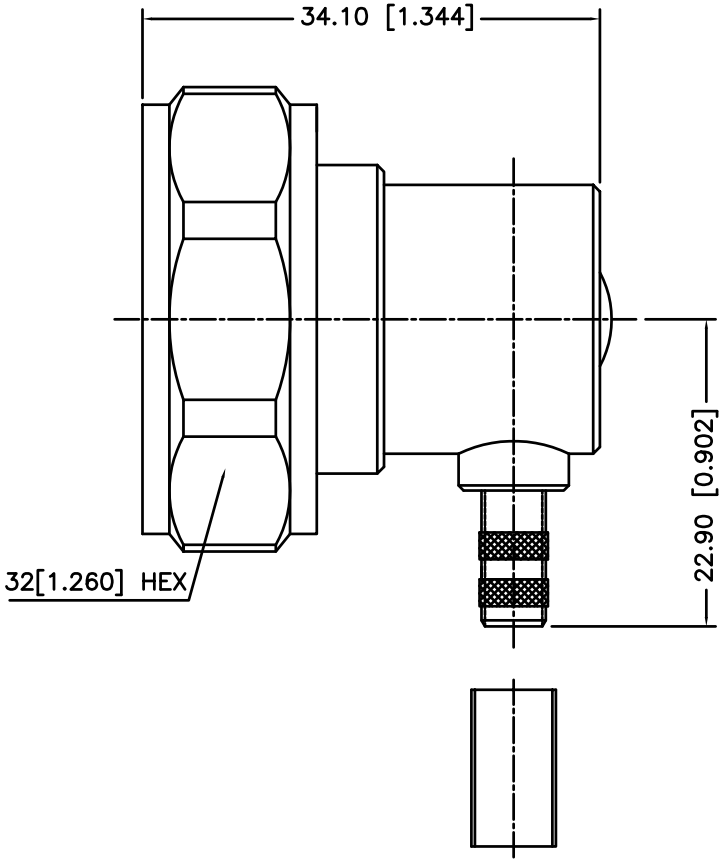

	DESCRIPTION	MATERIAL	FINISH	QTY
8				
7				
6				
5	FERRULE	COPPER	NICKEL	1
4	HEX NUT	BRASS	NICKEL	1
3	CONTACT PIN	BERYLLIUM COPPER	SILVER	1
2	INSULATOR	PTFE	NATURAL	1
1	BODY	BRASS	NEXCOTE	1

UNLESS OTHERWISE SPECIFIED DIMENSIONS ARE IN MILLIMETERS. DIMENSIONS IN [ ] ARE IN INCHES AND FOR CUSTOMER REFERANCE ONLY.

UNLESS OTHERWISE SPECIFIED TOLERANCES FOR MILLIMETERS ARE:
0.5 – 8mm ± 0.20mm
8 – 30mm ± 0.40mm
30 – 120mm ± 0.50mm

UNLESS OTHERWISE SPECIFIED TOLERANCES FOR INCHES ARE:
.020 – .315 = ± 0.007"
.315 – 1.180 = ± 0.015"
1.180 – 4.724 = ± 0.020"

DO NOT SCALE DRAWING

APPROVALS		DATE
DRAWN	CLEMENT	08/26/10
CHECKED		
ISSUED		
SHEET	1 OF 1	

CAD FILE C:/272/272196.DWG

Amphenol Connex

PART DESCRIPTION
7/16 MALE R/A PLUG
LMR 240/8X CABLE

PART NO. 272196

DWG. NO. 272196.DWG | REV. B | SIZE A | SCALE NA