NOTES:
1. MATERIAL
   CLIP - PA4T

2. PACKAGING:
   2000PCS/BOX

THIRD ANGLE PROJ.

PRELIMINARY ISSUE

REVISIONS				
REV	DESCRIPTION	DATE	ECO	APPR
A	RELEASE TO MFG.	29-Oct-19		KCE

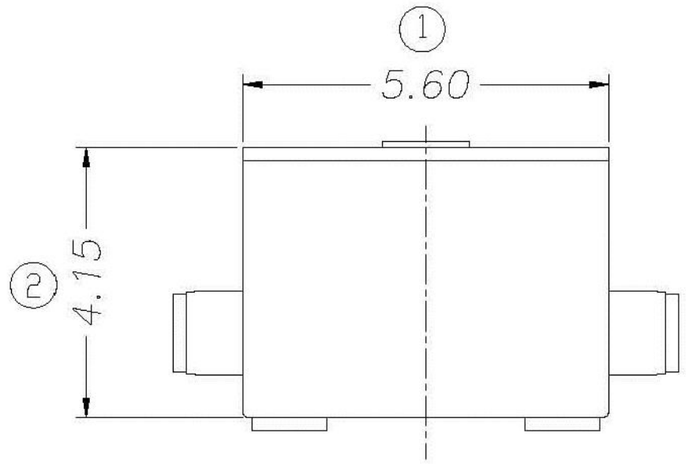

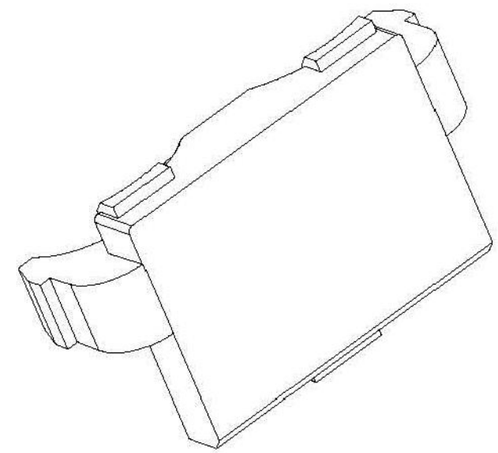

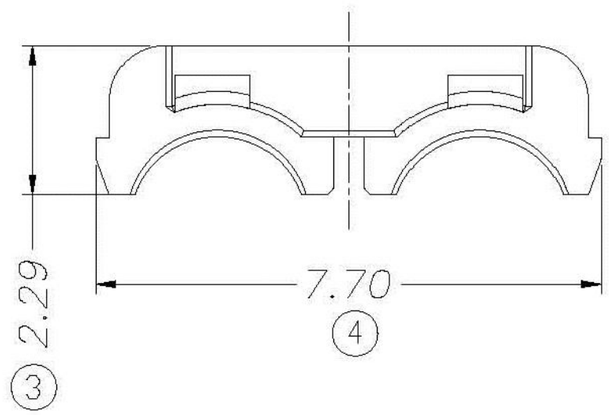

CONFIGURATION CONTROL:
NO CHANGES PERMITTED TO DRAWING WITHOUT
PPAP QUALIFIED CUSTOMER APPROVAL

CUSTOMER OUTLINE DRAWING
ALL OTHER SHEETS ARE FOR INTERNAL USE ONLY

UNLESS OTHERWISE SPECIFIED, DIMENSIONS ARE IN METRIC AND TOLERANCES ARE:

<0.5mm	0.5 - 6mm	6 - 30mm	30 - 120mm	ANGLES
± 0.05mm	±0.1mm	±0.2mm	± 0.3mm	±1°

NOTICE - These drawings, specifications, or other data (1) are, and remain the property of Amphenol corp. (2) must be returned upon requiest; and (3) arre confidential and not to be disclosed to any person other than those to whom they are given by Amphenol Corp. the funishing of these drawings, specifications, or other data by Amphenol Corp., or to any other person to anyone for any purpose is not to be regarded by implicatioin or otherwise in any manner licensing, granting rights to permitting such holder or any other sperson to manufacture, use or sell any product, process or design, patented or otherwsie, that may in any way be related to or disclosed by said drawings, specifications, or other data.

MATERIAL PA4T	DRAWN K. ELMES	DATE 18-Oct-19
	ENGINEER RICKSON	DATE 18-Oct-19
REFERENCE EAR 8754	APPROVED	DATE
CONFIGURATION LEVEL:	CAD FILE	
FINISH		

TITLE
RETAINER

SCALE: 4.0:1.0 | SHEET 2 OF 2

DWG SIZE: B | REV: A

Amphenol RF
www.amphenolrf.com

DRAWING NO.	HDCL01201
ITEM NO.	HDCL01201A
PART NO.	923-40298