REVISIONS				
REV	DESCRIPTION	DATE	ECN	BY
A	RELEASE TO MFG.	10-APR-24	----	KHL

NOTES:

1. MATERIALS AND FINISHES (MICROINCHES)
   MAIN BODY:
   BODY = ZINC ALLOY, (ZAMAK #3 PER ASTM B86) NICKEL PL. 100 MIN. THICK OVER COPPER
   PLASTIC = PPA, 33% GLASS FILLED, PER MODEL HFFR-4133, COLOR PER TABLE

   CONTACT = BRASS (PER ASTM B16, C36000) & BERYLLIUM COPPER (PER ASTM B196, C17300, TD04), GOLD PL. 5 MIN. THICK OVER PHOSPHORUS CONTENT 9%~13% ELECTROLESS NICKEL PL. 100 MIN. THICK
   INSULATOR = PTFE, PER ASTM D1710, COLOR: NATURAL.
   FERRULE = COPPER, NICKEL PL. 100 MIN. THICK OVER COPPER STRIKE

2. ELECTRICAL:
   A. IMPEDANCE : 50 OHM, NOMINAL
   B. FREQUENCY RANGE: DC- 6 GHz
   C. VSWR: 1.23 MAX.
   D. DIELECTRIC WITHSTANDING VOLTAGE: 800 VRMS, MIN.

3. MECHANICAL:
   A. DURABILITY: 100 CYCLES MIN.
   B. TEMPERATURE RANGE: -40°C TO 100°C
   C. MEETS IP67 SEALING REQUIREMENTS
   D. INTERFACE PER DIN 72594-1

4. PACKAGING:
   A. QUANTITY: TRAY PACK
   B. MARKING: TRAY TO BE MARKED "AMPHENOL RF, 2FA1-NXSP-C01E2 & DATE CODE"

5. ASSEMBLY
   A. STRIP CABLE PER RECOMMENDED DIMENSIONS
   B. SOLDER BULLET TO CABLE CENTER CONDUCTOR, BOTTOMING ON INSULATOR.
   C. INSERT FERRULE OVER CABLE.
   D. INSERT CABLE INTO CONNECTOR UNTIL IT BOTTOMS
   E. CRIMP FERRULE OVER BRAID ONTO BODY USING .128" HEX

6. SHOWS CABLE ENTRY DIMENSIONS

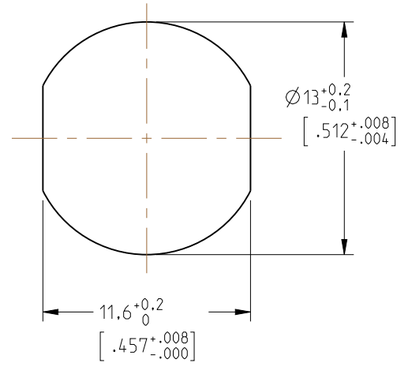

RECOMMEND MOUNTING HOLE DIMENSIONS

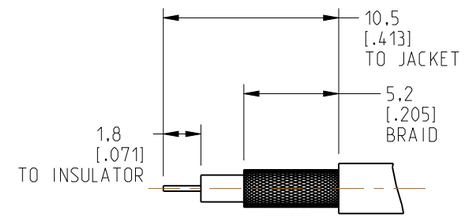

RECOMMENDED CABLE STRIPPING DIMENSIONS

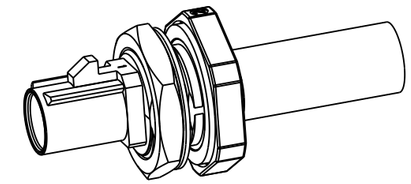

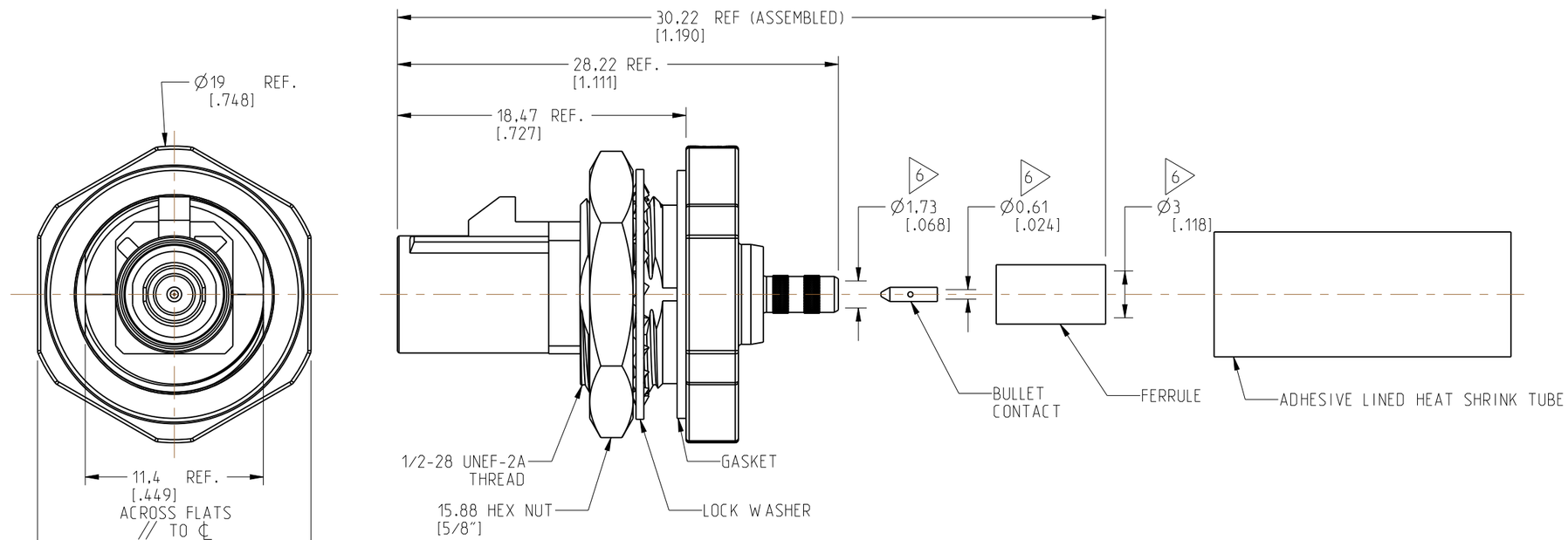

LOCK WASHER & HEX NUT ARE NOT SHOWN IN THIS VIEW

CODING	DRAWING NO.	COLOR	RAL NO.
A	2FA1-NASP-C01E2	JET BLACK	9005
B	2FA1-NBSP-C01E2	CREAM	9001
C	2FA1-NCSP-C01E2	SIGNAL BLUE	5005
D	2FA1-NDSP-C01E2	CLARET VIOLET	4004
E	2FA1-NESP-C01E2	LEAF GREEN	6002
F	2FA1-NFSP-C01E2	NUT BROWN	8011
G	2FA1-NGSP-C01E2	BLUE GREY	7031
H	2FA1-NHSP-C01E2	HEATHER VIOLET	4003
I	2FA1-NISP-C01E2	BEIGE	1001
K	2FA1-NKSP-C01E2	CURRY	1027
L	2FA1-NLSP-C01E2	CARMINE RED	3002
M	2FA1-NMSP-C01E2	PASTEL ORANGE	2003
N	2FA1-NNSP-C01E2	PASTEL GREEN	6019
Z	2FA1-NZSP-C01E2	WATER BLUE	5021

CONFIGURATION CONTROL:
NO CHANGES PERMITTED TO DRAWING WITHOUT PPAP QUALIFIED CUSTOMER APPROVAL

CUSTOMER OUTLINE DRAWING

ALL OTHER SHEETS ARE FOR INTERNAL USE ONLY

NOTICE: These drawings, specifications, or other data (1) are, and remain the property of Amphenol corp. (2) must be returned upon request; and (3) are confidential and not to be disclosed to any person other than those to whom they are given by Amphenol Corp. The furnishing of these drawings, specifications, or other data by Amphenol Corp., or to any other person to anyone for any purpose is not to be regarded by implication or otherwise in any manner licensing, granting rights to permitting such holder or any other person to manufacture, use or sell any product, process or design, patented or otherwise, that may in any way be related to or disclosed by said drawings, specifications, or other data.

THIRD ANGLE PROJ.

REFERENCE: N/A
EAR#: 10933

UNLESS OTHERWISE SPECIFIED
DIMENSIONS ARE METRIC [INCHES] AND TOLERANCES ARE:
<0.5mm = ±0.05mm [<0.020 = ±0.002]
0.5 - 6mm = ±0.1mm [>0.020 - 0.236 = ±0.004]
>6.00 - 30mm = ±0.2mm [>0.236 - 1.181 = ±0.008]
>30.00 - 120mm = ±0.3mm [>1.181 - 4.725 = ±0.012]
ANGLES = ±1°

MATERIAL

ENGR.1: M.ZHANG
ENGR.2:
DATE: 09-Oct-23

TITLE: FAKRA SMB PLUG FOR C01 CABLE REAR BULKHEAD, IP-67

SHEET NO. 2 OF 2
SCALE: 3.0:1.0

Amphenol RF

SIZE: B
DRAWING NO. 2FA1-NXSP-C01E2
ITEM NO. 2FA1-NXSP-C01E2
PART NO. 2FA1-NXSP-C01E2
REV: A