NOTES:

1. MATERIALS AND FINISHES:
   BODY, REAR BODY, NUT, INNER FERRULE, LOCK WASHER,
   BULLET CONTACT & SLEEVE- BRASS, GOLD PLATING
   CONTACT - BeCu, GOLD PLATING
   INSULATOR - PTFE, NATURAL
   INSULATOR DISC - TORLON, NATURAL

2. ELECTRICAL:
   A. IMPEDANCE: 50 OHM
   B. FREQUENCY RANGE: DC - 9 GHz
   C. VSWR: 1.30 MAX. @ DC - 3 GHz
   1.40 MAX. @ 3 - 6 GHz
   1.70 MAX. @ 6 - 9 GHz
   D. DIELECTRIC WITHSTANDING VOLTAGE: 500 VRMS, MIN.

3. MECHANICAL:
   A. DURABILITY: 500 CYCLES MIN.
   B. TEMPERATURE RANGE: -65° C TO +165° C

4. PACKAGING:
   A. QUANTITY: SINGLE PACK
   B. MARKING: BAG TO BE MARKED
   "AMPHENOL RF, 34-5081 AND DATE CODE"
   C. NUT, LOCK WASHER, BULLET CONTACT, SLEEVE,
   INSULATOR DISC AND INNER FERRULE ARE PACKAGED LOOSE

5. AMPHENOL SPANNER WRENCH 227-1490 REQUIRED TO MOUNT CONNECTOR TO PANEL.

6. CABLE ASSEMBLY INSTRUCTIONS:
   A. TRIM CABLE AS SHOWN (TWO STAGE TRIM).
   B. INSERT CABLE THROUGH INNER FERRULE AND PEEL BRAID BACK, OVER INNER FERRULE
   C. INSTALL SLEEVE AND INSULATOR DISC OVER CABLE, BOTTOMING ON INNER FERRULE.
   D. SOLDER CONTACT TO CABLE CENTER CONDUCTOR, BOTTOMING ON INSULATOR DISC.
   E. INSERT CABLE INTO CONNECTOR UNTIL IT BOTTOMS.
   F. CRIMP BODY OVER INNER FERRULE USING 0.105" HEX

7 SHOWS CABLE ENTRY DIMENSIONS.

REVISIONS

REV	DESCRIPTION	DATE	ECN	BY
A	RELEASE TO MFG.	08-DEC-25	17669	SH

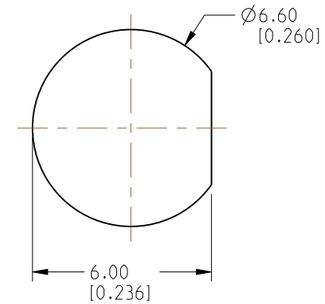

RECOMMENDED MOUNTING HOLE DIMENSIONS

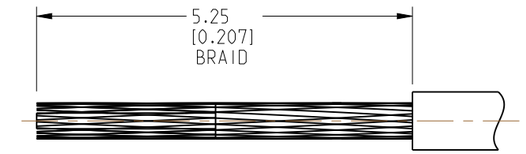

RECOMMENDED CABLE STRIPPING DIMENSIONS (TRIM 1)

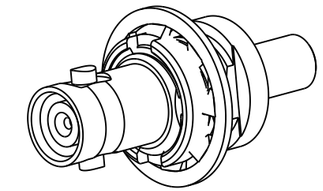

SCALE 3.000

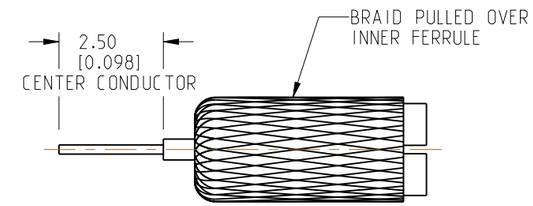

RECOMMENDED CABLE STRIPPING DIMENSIONS (TRIM 2)

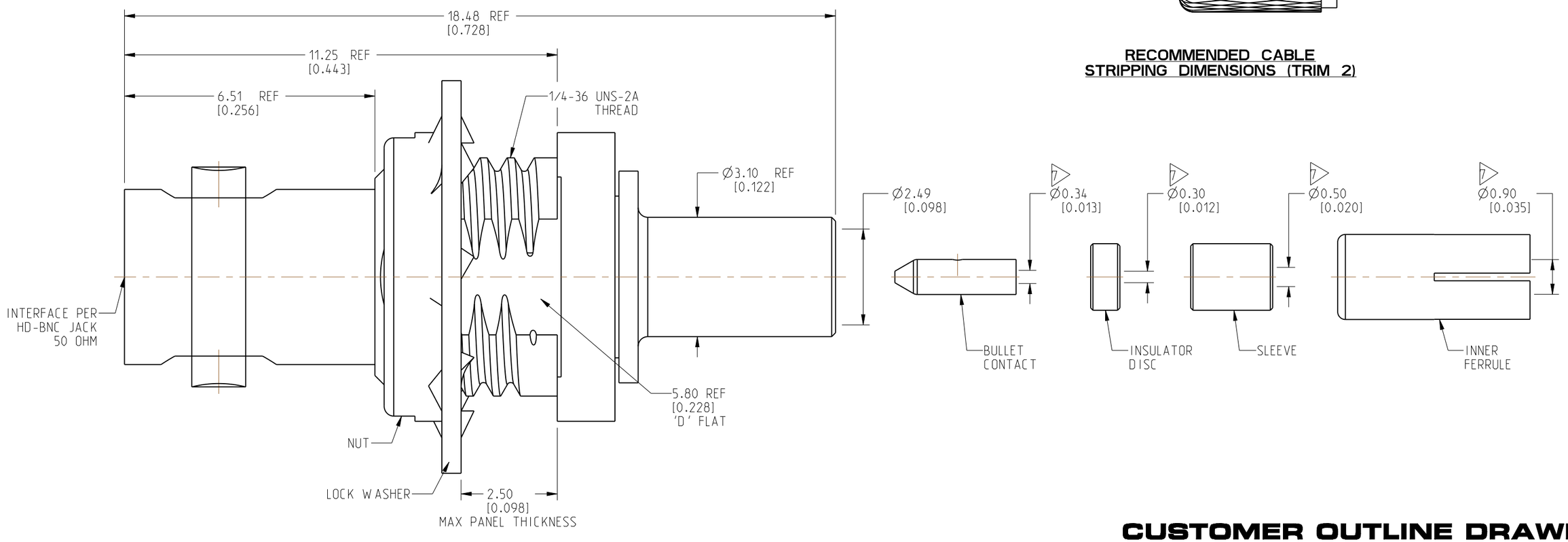

CUSTOMER OUTLINE DRAWING

ALL OTHER SHEETS ARE FOR INTERNAL USE ONLY

NOTICE: These drawings, specifications, or other data (1) are, and remain the property of Amphenol corp. (2) must be returned upon request; and (3) are confidential and not to be disclosed to any person other than those to whom they are given by Amphenol Corp. The furnishing of these drawings, specifications, or other data by Amphenol Corp., or to any other person to anyone for any purpose is not to be regarded by implication or otherwise in any manner licensing, granting rights to permitting such holder or any other person to manufacture, use or sell any product, process or design, patented or otherwise, that may in any way be related to or disclosed by said drawings, specifications, or other data.

THIRD ANGLE PROJ.

REFERENCE

EAR# 10461

UNLESS OTHERWISE SPECIFIED
DIMENSIONS ARE METRIC [INCHES] AND TOLERANCES ARE:

<0.5mm = ±0.05mm	[<0.020 = ±0.002]
0.5 - 6mm = ±0.1mm	[>0.020 - 0.236 = ±0.004]
>6.00 - 30mm = ±0.2mm	[>0.236 - 1.181 = ±0.008]
>30.00 - 120mm = ±0.3mm	[>1.181 - 4.725 = ±0.012]

ANGLES = ±1°

MATERIAL: SEE NOTES

ENGR.1: MADHAN G | ENGR.2: JACK LIANG | DATE: 02-JUN-25

TITLE: HD-BNC STR BHD JACK FOR 0.81 MM CABLE

SHEET NO. 2 OF 2 | SCALE: 9.5:1.0

Amphenol RF

SIZE: B | DRAWING NO. 34-5081 | ITEM NO. 34-5081 | PART NO. 34-5081 | REV: A