NOTES:

1. MATERIALS AND FINISHES:
   BODY & - STAINLESS STEEL, PASSIVATED
   CONTACT - BeCu, GOLD PLATING
   INSULATOR - ULTEM-1000, NATURAL

2. ELECTRICAL:
   A. IMPEDANCE: 50 OHM
   B. FREQUENCY RANGE: DC-40 GHz
   C. VSWR (RETURN LOSS): 1.20 : 1 @ DC - 26.5 GHz MAX.
   1.45 : 1 @ 26.5 - 40 GHz MAX.

   D. DIELECTRIC WITHSTANDING VOLTAGE: 600 VRMS, MIN.
   E. ELECTRICAL SPECS STATED ARE INDEPENDANT OF PCB DESIGN.

3. MECHANICAL:
   A. DURABILITY: 500 CYCLES MIN.
   B. TEMPERATURE RANGE: -65°C TO +85°C

4. PACKAGING:
   A. QUANTITY: SINGLE PACK
   B. MARKING: PACKAGING TO BE MARKED
   "AMPHENOL RF, 292-109J-52S, AND DATE CODE"

REVISIONS

REV	DESCRIPTION	DATE	ECN	BY
A	RELEASE TO MFG.	09-MAR-26	17851	LEO
B	THREAD CALLOUT WAS 0-80UNEF-2B	29-SEP-26	18068	LEO

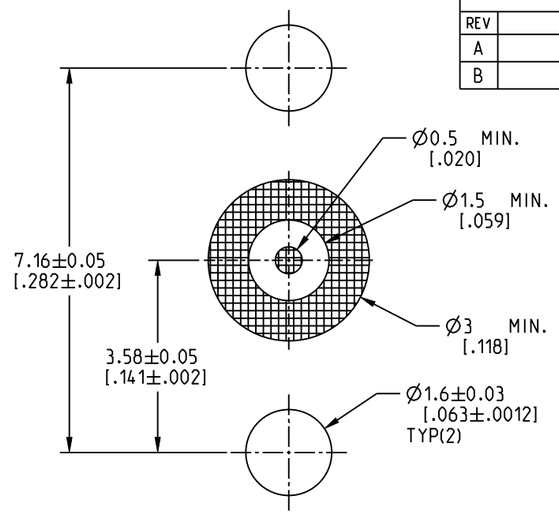

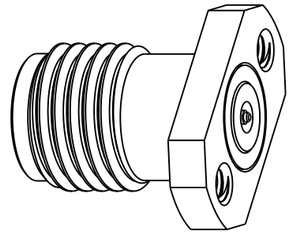

SCALE 4.000

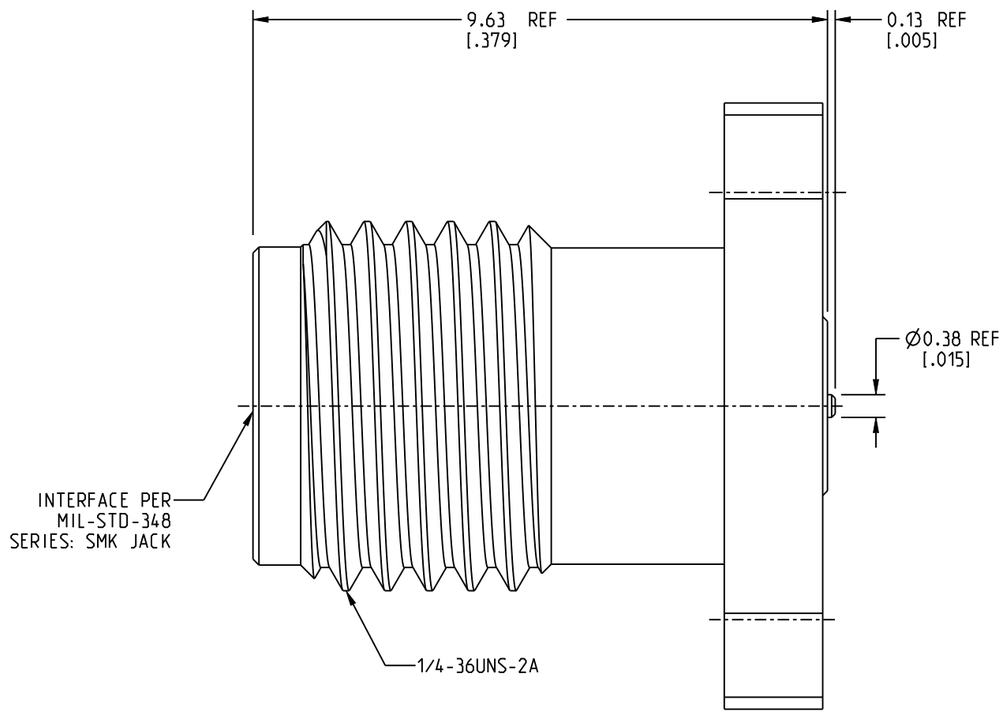

RECOMMENDED PCB LAYOUT

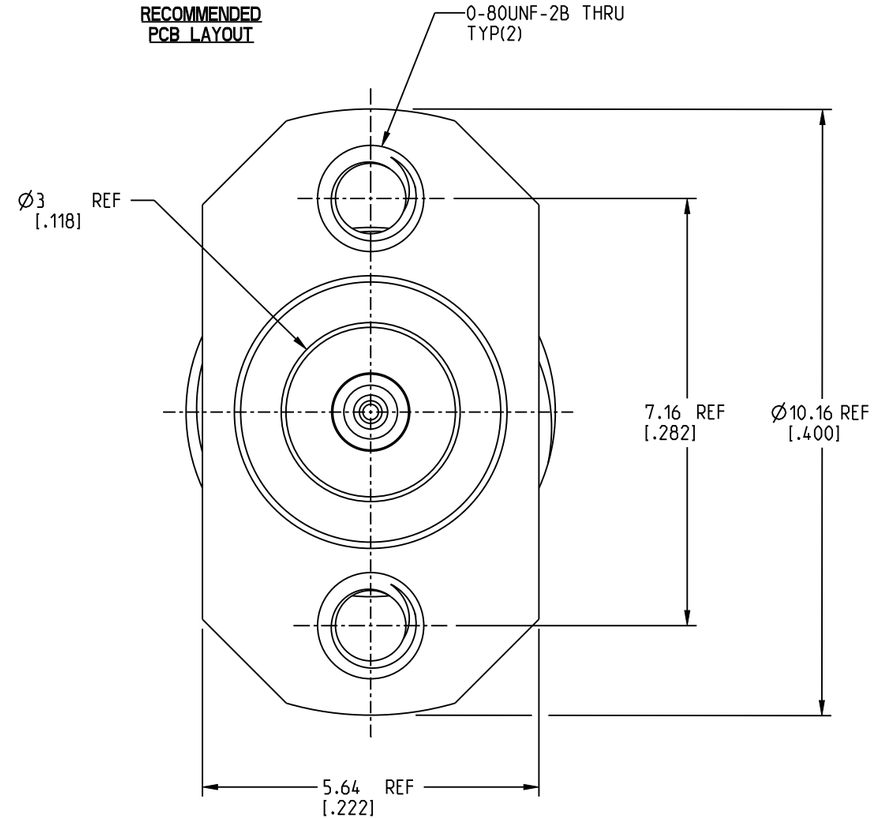

CUSTOMER OUTLINE DRAWING

ALL OTHER SHEETS ARE FOR INTERNAL USE ONLY

NOTICE: These drawings, specifications, or other data (1) are, and remain the property of Amphenol corp. (2) must be returned upon request; and (3) are confidential and not to be disclosed to any person other than those to whom they are given by Amphenol Corp. The furnishing of these drawings, specifications, or other data by Amphenol Corp., or to any other person to anyone for any purpose is not to be regarded by implication or otherwise in any manner licensing, granting rights to permitting such holder or any other person to manufacture, use or sell any product, process or design, patented or otherwise, that may in any way be related to or disclosed by said drawings, specifications, or other data.

THIRD ANGLE PROJ.

REFERENCE: 292-108J-52S

EAR#: 12747

UNLESS OTHERWISE SPECIFIED
DIMENSIONS ARE METRIC [INCHES] AND TOLERANCES ARE:
<0.5mm = ±0.05mm [<0.020 = ±0.002]
0.5 - 6mm = ±0.1mm [>0.020 - 0.236 = ±0.004]
>6.00 - 30mm = ±0.2mm [>0.236 - 1.181 = ±0.008]
>30.00 - 120mm = ±0.3mm [>1.181 - 4.725 = ±0.012]
ANGLES = ±1°

MATERIAL: SEE NOTES

ENGR.1: L. PARENTE

ENGR.2: JACK LIANG

DATE: 24-FEB-25

TITLE: 2.92 STR JACK TO PCB SOLDERLESS STRIPLINE 0-80 THREAD

SHEET NO. 2 OF 2

SCALE: 10.0:1.0

Amphenol RF

SIZE: B

DRAWING NO.: 292-109J-52S

ITEM NO.: 292-109J-52S

PART NO.: 292-109J-52S

REV: B