NOTES:

1. ELECTRICAL:
   - A. IMPEDANCE: 50Ω (NOMINAL)
   - B. FREQUENCY RANGE: DC-3.0 GHz
   - C. CONTACT RESISTANCE: CENTER: 20mΩMAX.: MEASURED AT 10mA MAX. 25 mΩMAX AFTER CYCLING
     OUTSIDE: 10mΩ MAX. 15 mΩMAX AFTER CYCLING
   - D. INSULATION RESISTANCE: 500MΩ MIN.: MEASURED AT 100 VDC.
   - E. D.W.V.: NO LINE OR INSULATION BREAKDOWN: 200 VAC FOR 1 MIN.
   - F. VSWR: 1.300 MAX. (DC TO 3.0 GHz)
   - G. TYPICAL INSERTION LOSS : [0.00178 x (L in mm) x $\sqrt{\text{Freq. in GHz}}$] + [0.078 x $\sqrt{\text{Freq. in GHz}}$]

2. PHYSICAL:
   - A. FEMALE CONTACT HOLDING FORCE: 0.15N MIN. : MEASURED WITH A ∅0.475mm PIN GAUGE.
   - B. DURABILITY: 30 CYCLES
   - C. TEMPERATURE RANGE: -40°C TO +90°C.
   - D. AMC CONNECTOR MATING FORCE: 7 N TYPICAL
   - E. AMC CONNECTOR DEMATING FORCE: 4 N MIN 1st CYCLE / 2 N MIN AFTER
   - F. AMC INTERFACE IS FULLY COMPATIBLE WITH "U.FL" SERIES PRODUCT.

3. MATERIALS AND FINISHES (in micrometers):

   CONNECTOR BODY: PHOSPHOR BRONZE, CONTACT PART GOLD PLATED (0.05um MIN.) OVER NICKEL (1um MIN.)
   CONNECTOR CENTER CONTACT: PHOSPHOR BRONZE, CONTACT PART GOLD PLATED (0.1um MIN.) OVER NICKEL (1um MIN.)
   CONNECTOR INSULATOR: HIGH TEMP PLASTIC UL 94V-0, WHITE
   CABLE JACKET: FEP
   CABLE DIELECTRIC: FEP
   CABLE CENTER CONDUCTOR: ANNEALED COPPER WIRE STRANDED, SILVER PLATED
   CABLE OUTER CONDUCTOR: ANNEALED COPPER WIRE BRAID, TIN PLATED

4. PACKAGING:
   - A. BAGS OF 100 PIECES

REVISIONS

REV	DESCRIPTION	DATE	ECN	BY
A	RELEASE TO MFG.	9/4/14	50043	BCG
B	UPDATED CONNECTOR DIMENSIONS	3/2/16	50939	MM
C	CONNECTOR BODY WAS SILVER PLATED, SOURCE WAS CHANGED,FORMATS WAS CHANGED	11-Nov-22	16547	SH

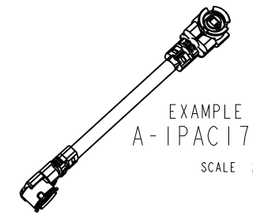

EXAMPLE SHOWN:
A-1PAC178-XXXN2
SCALE 2.000

90° - "C"

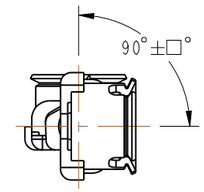

180° - "F"

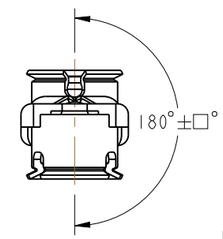

CABLE ASSEMBLY TOLERANCES		
OVERALL LENGTH L (mm)	STANDARD TOLERANCE (mm)	ANGULAR TOLERANCE ± □°
50<L<100	± 4	± 30°
101 < L 200	± 4	± 45°
201 < L 500	± 8	± 45°
501 < L 1000	± 12	± 45°
1001 < L	±1.5 %	± 45°

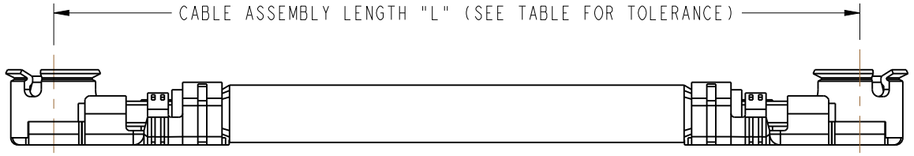

A-1PAX178-XXXYZ

- SERIES NAME (A=AMC)
- AMC RIGHT ANGLE PLUG (MHF I)
- ORIENATION: (CLOCKWISE)
  - C = 90°
  - F = 180°
  - - = 0°
- CABLE TYPE: (178 = RG-178)
- CABLE ASSEMBLY LENGTH IN MM (SHORTEST LENGTH IS 50MM) (L<1000MM)
  EXAMPLE: 150=150MM
  01K=1000MM
  CHANGE"-" TO "X" WHEN L>1000MM
  EXAMPLE: 1020=1020MM
- CABLE COLOR: N=NATURAL(BROWN) B=BLACK
- NO. OF TERMINATED ENDS (1 OR 2)

AMC RIGHT ANGLE PLUG DETAILS

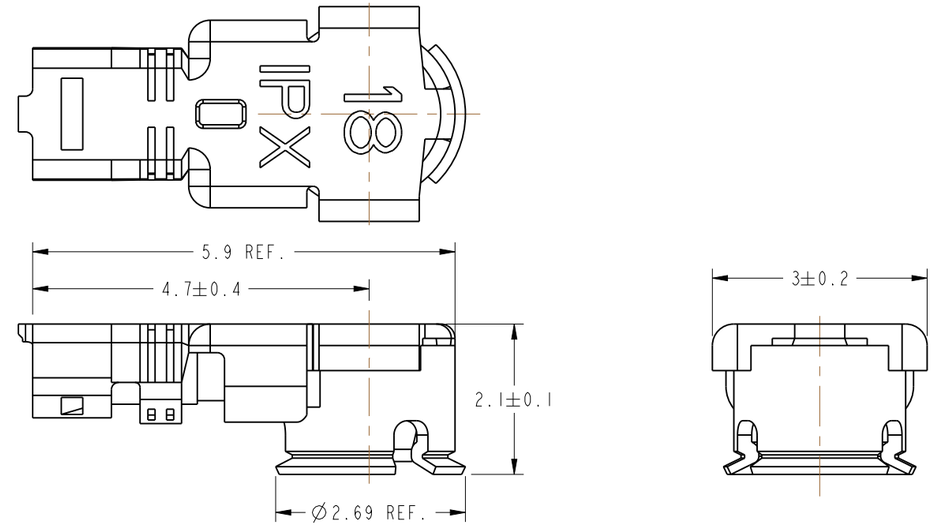

CUSTOMER OUTLINE DRAWING

ALL OTHER SHEETS ARE FOR INTERNAL USE ONLY

NOTICE: These drawings, specifications, or other data (1) are, and remain the property of Amphenol corp. (2) must be returned upon request; and (3) are confidential and not to be disclosed to any person other than those to whom they are given by Amphenol Corp. The furnishing of these drawings, specifications, or other data by Amphenol Corp., or to any other person to anyone for any purpose is not to be regarded by implication or otherwise in any manner licensing, granting rights to permitting such holder or any other person to manufacture, use or sell any product, process or design, patented or otherwise, that may in any way be related to or disclosed by said drawings, specifications, or other data.

THIRD ANGLE PROJ.

REFERENCE

EAR# EAR # 6093

UNLESS OTHERWISE SPECIFIED
DIMENSIONS ARE METRIC [INCHES] AND TOLERANCES ARE:

<0.5mm = ±0.05mm	[<0.020 = ±0.002]
0.5 - 6mm = ±0.1mm	[>0.020 - 0.236 = ±0.004]
>6.00 - 30mm = ±0.2mm	[>0.236 - 1.181 = ±0.008]
>30.00 - 120mm = ±0.3mm	[>1.181 - 4.725 = ±0.012]

ANGLES = ±1°

MATERIAL

ENGR.1 L.QIN | ENGR.2 E WANKOFF | DATE 19-May-14

TITLE
CABLE ASSY
AMC ,PLUG

SHEET NO. 2 OF 2 | SCALE: 6.0:1.0

Amphenol RF

SIZE		REV
B	DRAWING NO. A-1PAX178-XXXYZ	C
	ITEM NO. A-1PAX178-XXXYZ	
	PART NO. A-1PAX178-XXXYZ	