NOTES:

1. MATERIALS AND FINISHES:

INNER FERRULE	- BRASS, GOLD PLATING
SLEEVE	- BRASS, GOLD PLATING
BODY	- BeCu, GOLD PLATING
HOUSING	- BRASS, GOLD PLATING
CONTACT	- BRASS, GOLD PLATING
INSULATOR	- PTFE, NATURAL

2. ELECTRICAL:

A. IMPEDANCE: 50 OHM, NOMINAL
B. FREQUENCY RANGE: 0-6 GHz
C. D.W.V: 1000 VRMS, MIN.

3. MECHANICAL:

A. DURABILITY: 500 CYCLES MIN.
B. TEMPERATURE RANGE: -55°C TO +155°C

4. CRIMPED FERRULE HEX CRIMP SIZE .105"

5. CONTACT PIN CAN BE SOLDERED OR USE 4-WAY INDENT TOOL #47025

6 SHOWS CABLE ENTRY DIMENSIONS.

THIRD ANGLE PROJ.

REVISIONS

REV	DESCRIPTION	DATE	ECO	APPR
NC	INITIAL RELEASE	01-Jun-09	-----	MZ
A	CHANGE BODY MATERIAL TO BeCu; CHANGE SPACER I.D. UPDATE DRAWING FORMAT	09-Dec-13	2670	MZ
B	SYNC, REDRAWN IN THE PRO/E	07-Aug-17	04601	MZ

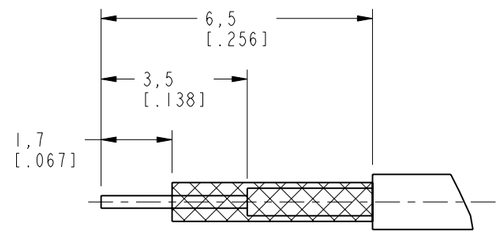

RECOMMENDED
CABLE STRIPPING DIM'S

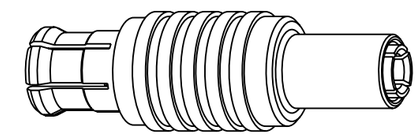

SCALE 4.000

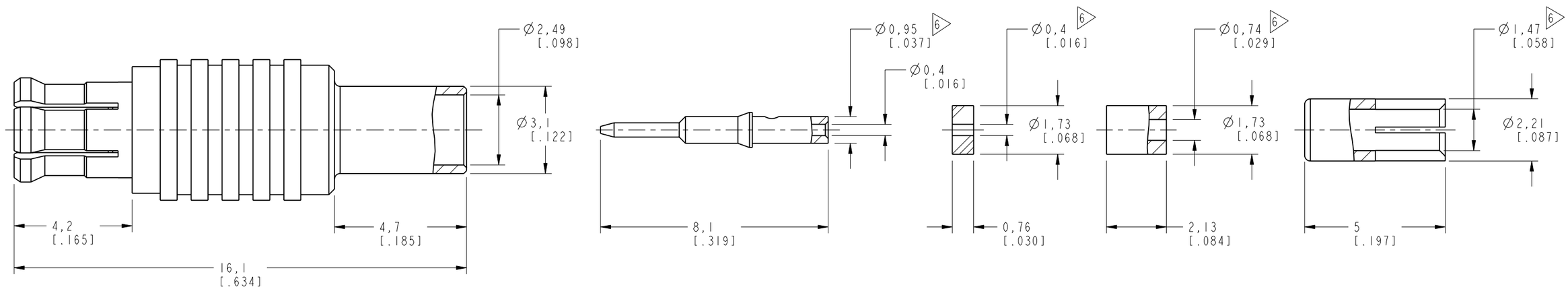

CUSTOMER OUTLINE DRAWING

ALL OTHER SHEETS ARE FOR INTERNAL USE ONLY

UNLESS OTHERWISE SPECIFIED, DIMENSIONS ARE IN METRIC AND TOLERANCES ARE:

<0.5mm	0.5 - 6mm	6 - 30mm	30 - 120mm	ANGLES
± 0.05mm	±0.1mm	±0.2mm	± 0.3mm	±1°

NOTICE - These drawings, specifications, or other data (1) are, and remain the property of Amphenol corp. (2) must be returned upon request; and (3) are confidential and not to be disclosed to any person other than those to whom they are given by Amphenol Corp. the furnishing of these drawings, specifications, or other data by Amphenol Corp., or to any other person to anyone for any purpose is not to be regarded by implication or otherwise in any manner licensing, granting rights to permitting such holder or any other person to manufacture, use or sell any product, process or design, patented or otherwise, that may in any way be related to or disclosed by said drawings, specifications, or other data.

MATERIAL
-

REFERENCE
AND
CONFIGURATION LEVEL:

FINISH

DRAWN M.ZHANG	DATE 07-Aug-17	
ENGINEER E.ZHU	DATE 24-Aug-09	
APPROVED S.HSIEH	DATE 07-Aug-17	
CAD FILE		

TITLE
MCX CRIMP PLUG
(FOR 1.32 MM CABLE)

SCALE: 7.0:1.0 | SHEET 2 OF 2

DWG SIZE B | REV B

Amphenol RF
www.amphenolrf.com

DRAWING NO. MCX1121B1-3GT30G-C132-50
ITEM NO. 081121AAL64GE5F
PART NO. 252198