NOTES:

1. MATERIALS AND FINISHES:
   BODY - BRASS, NICKEL PLATED
   CONTACT - BeCu, MATTE TIN PLATED
   CONTACT PIN - BRASS, MATTE TIN PLATED
   INSULATORS - PTFE
   CRIMP FERRULE - COPPER ALLOY, NICKEL PLATED

2. ELECTRICAL:
   A. IMPEDANCE = 75 OHMS, NOMINAL
   B. VSWR (DC-1.0 GHz) = 1.15 : 1 MAX.
   D. DIELECTRIC WITHSTANDING VOLTAGE = 1000 VRMS
   E. INSULATION RESISTANCE = 500 MEGOHMS MIN.

3. PHYSICAL:
   A. OPERATING TEMPERATURE = -40°F TO +185°F (-40°C TO +85°C)
   B. CENTER CONTACT TO ACCEPT Ø.022 TO Ø.042 PIN [Ø0,56 TO Ø1,07]

4. CABLE ASSEMBLY INSTRUCTIONS:
   A. PREPARE CABLE AS SHOWN.
   B. SOLDER CONTACT PIN TO CABLE CENTER CONDUCTOR.
      PIN SHOULD BOTTOM ON CABLE DIELECTRIC.
      (OPTIONAL CRIMP WITH INDENT TYPE TOOL)
   C. INSERT CABLE INTO CONNECTOR BODY UNTIL CABLE
      BOTTOMS INTERNALLY.
   D. CRIMP FERRULE OVER BRAID AND BODY USING A .151 HEX.

5. PACKAGING:
   A. PACKAGE CONNECTOR AS PER ROUTING INSTRUCTIONS.
   B. MARK BOX OR TAG "531-40192 YYWW"
   C. BULK PACK AS FOLLOWS:
      CONTACT 50 PCS IN 1 BAG;
      FERRULE 50 PCS IN 1 BAG;
      INSULATOR 50 PCS IN 1 BAG;
      CONNECTOR 50 PCS IN 1 BAG;
      ALL 4 BAGS IN 1 BOX

THIRD ANGLE PROJ.

REVISIONS

REV	DESCRIPTION	DATE	ECO	APPR
A	RELEASE TO MFG	3/28/07	46411	HP
B	DIM .128 HEX CHANGED TO .151 HEX IN NOTE 4.D	6/5/07	46559	AK
C	PACKAGE WAS CHANGED/ RD-DM12028011	05-Mar-12	48975	IX

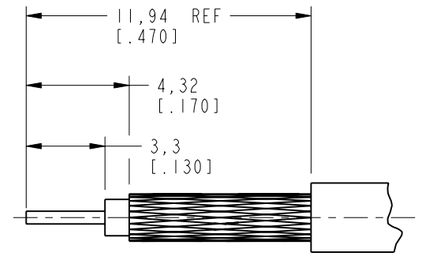

RECOMMENDED CABLE STRIPPING DIMENSIONS
SCALE 4.000

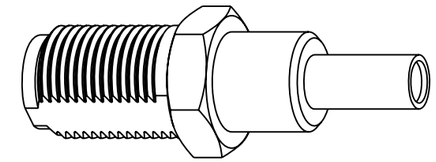

SCALE 2.000

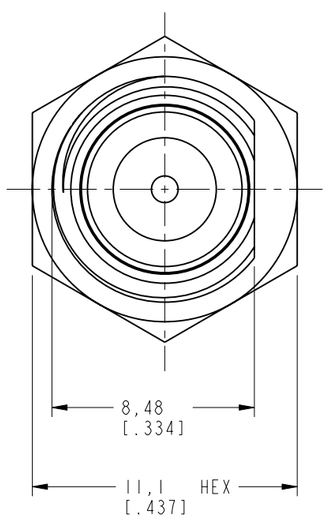

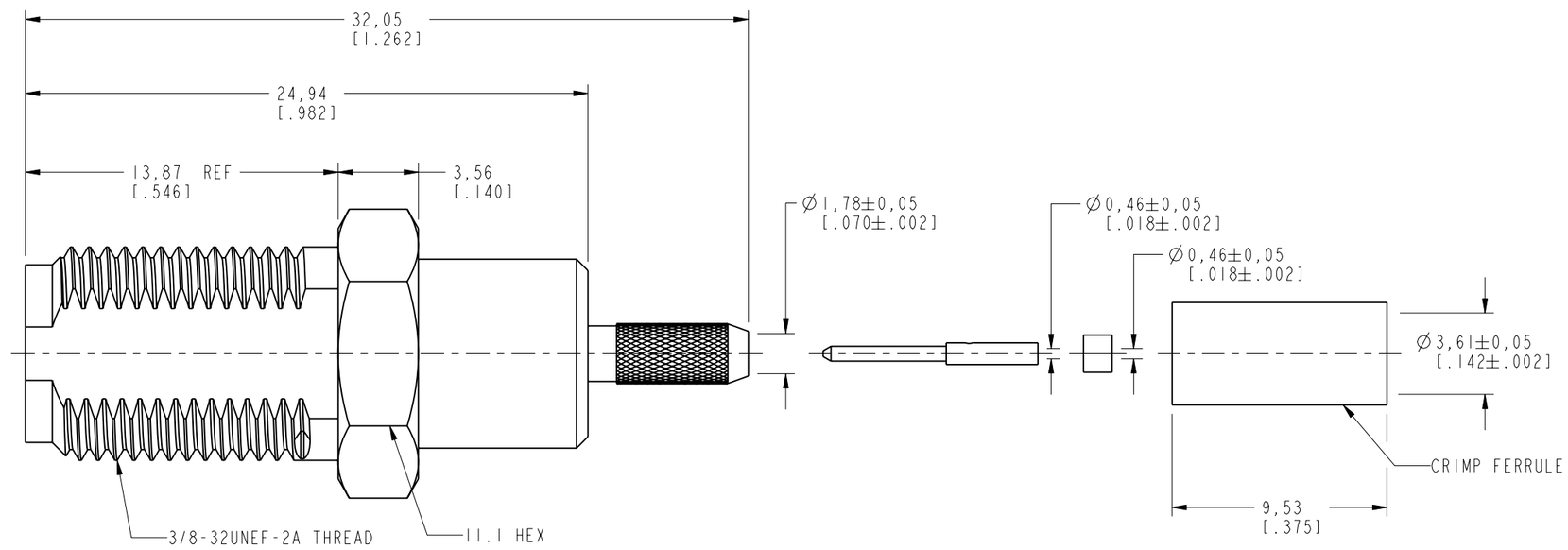

CUSTOMER OUTLINE DRAWING

ALL OTHER SHEETS ARE FOR INTERNAL USE ONLY

UNLESS OTHERWISE SPECIFIED, DIMENSIONS ARE IN METRIC AND TOLERANCES ARE:

<0.5mm	0.5 - 6mm	6 - 30mm	30 - 120mm	ANGLES
± 0.05mm	±0.1mm	±0.2mm	± 0.3mm	±1°

NOTICE - These drawings, specifications, or other data (1) are, and remain the property of Amphenol corp. (2) must be returned upon requiest; and (3) arre confidential and not to be disclosed to any person other than those to whom they are given by Amphenol Corp. the funishing of these drawings, specifications, or other data by Amphenol Corp., or to any other person to anyone for any purpose is not to be regarded by implicatioin or otherwise in any manner licensing, granting rights to permitting such holder or any other sperson to manufacture, use or sell any product, process or design, patented or otherwsie, that may in any way be related to or disclosed by said drawings, specifications, or other data.

MATERIAL
-
-

REFERENCE
EAR # 2259 AND 616-1082

CONFIGURATION LEVEL: □□□□

FINISH

DRAWN I.XU	DATE 01-Mar-12	
ENGINEER H. PARIKH	DATE 01/04/06	
APPROVED S.HSIEH	DATE 03-Mar-12	
CAD FILE		

TITLE
TYPE F BHD JACK FOR RG / RD-179 & BELDEN 179DT

SCALE: 4.0:1.0 | SHEET 2 OF 2

DWG SIZE B | REV C

Amphenol RF
Danbury CT USA, Tainan, Taiwan, Shenzhen, China
www.amphenolrf.com

DRAWING NO. 531-40192

ITEM NO. 531-40192

PART NO. 531-40192