NOTES:

1. MATERIALS AND FINISH (IN MICRO-INCHES)

   BODY = ZINC DIECAST (PER ASTM B86, UNS Z33520) , MATTE TIN PL. 100 MIN. THICK OVER NICKEL PL. 100 MIN. THICK OVER COPPER PL.(250 MIN./300 MAX.) THICK
   INSULATOR = PTFE PER ASTM D1710, COLOR: NATURAL
   HOUSING = PPE+PS, COLOR: PER TABLE
   FERRULE = COPPER (PER ASTM B15, UNS C11000 OR C12200) NICKEL PL. 100 MIN. THICK OVER COPPER STRIKE

   CONTACT SUPPLIED SEPARATELY AS P/N: FKCP03301A (5,000 PCS. REEL)
   C65 FERRULE MAY BE PURCHASED SEPARATELY AS P/N: FKFR01101
   CABLE DEFINITIONS PER AMPHENOL REPORT DE825

2. ELECTRICAL:

   A. IMPEDANCE: 50 OHM, NOMINAL
   B. FREQUENCY RANGE: DC-3.0 GHz
   C. VSWR(RETURN LOSS): 1.400 (-15.6dB), MAX. (DC-2.0 GHz)
      (MATED PAIR): 1.500 (-13.9dB), MAX. (2.0-3.0 GHz)
   D. D.W.V.: 800 VRMS, MIN.

3. MECHANICAL:

   A. DURABILITY: 100 CYCLES MIN.
   B. TEMPERATURE RANGE: -40° C TO 85° C
   C. USCAR-17 COMPLIANT
   D. INTERFACE PER DIN 72594-1

4. PACKAGING:

   A. QUANTITY: TRAY PACK
   B. MARKING: TRAY TO BE MARKED "AMPHENOL, 3FA1-NXSJ-C65W0, AND DATE CODE"

5. CABLE ASSEMBLY INSTRUCTIONS PER 349-50801

THIRD ANGLE PROJ.

REVISIONS

REV	DESCRIPTION	DATE	ECO	APPR
A	RELEASE TO MFG.	29-Dec-09	-----	SH

CONFIGURATION CONTROL:
NO CHANGES PERMITTED TO DRAWING WITHOUT PPAP QUALIFIED CUSTOMER APPROVAL

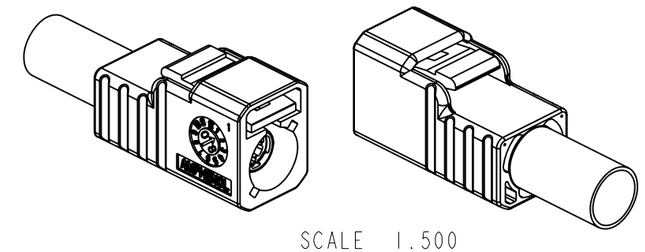

SCALE 1.500

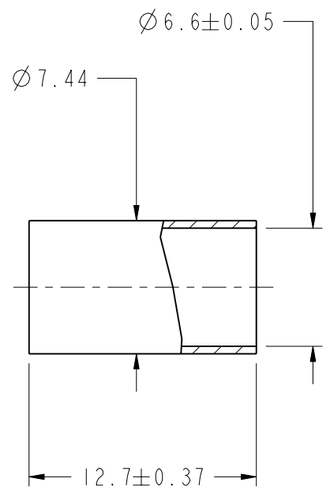

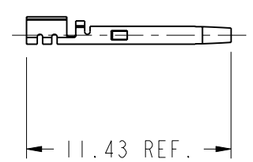

CONTACT SHOWN FOR REFERENCE ONLY

SECTION A-A

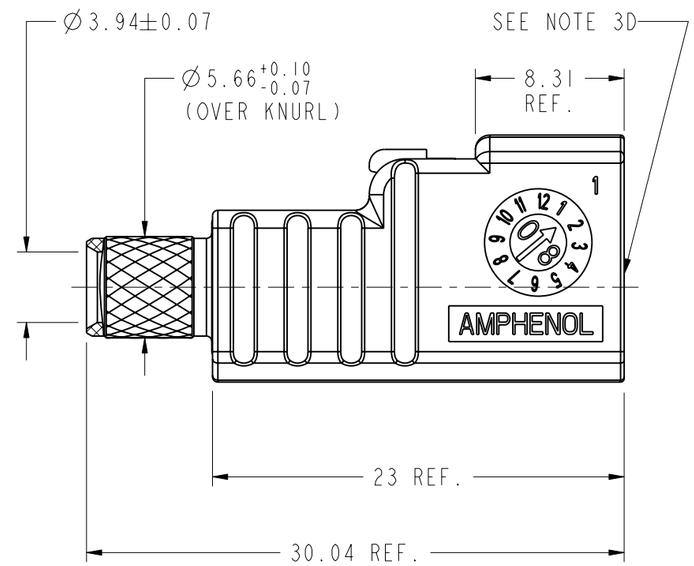

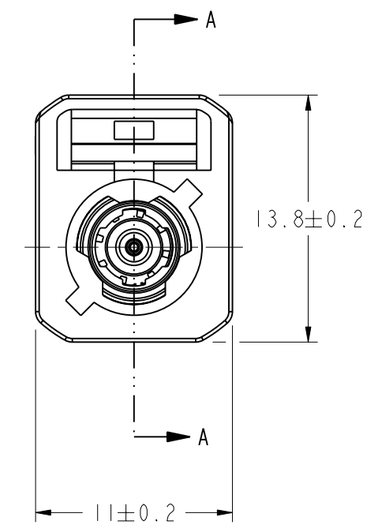

SEE TABLE FOR PART NUMBER, COLOR, AND KEY CODING

- "C" KEYING SHOWN -

CODING	DRAWING NO.	COLOR	RAL NO.
A	3FA1-NASJ-C65W0	JET BLACK	9005
B	3FA1-NBSJ-C65W0	CREAM	9001
C	3FA1-NCSJ-C65W0	SIGNAL BLUE	5005
D	3FA1-NDSJ-C65W0	CLARET VIOLET	4004
E	3FA1-NESJ-C65W0	LEAF GREEN	6002
F	3FA1-NFSJ-C65W0	NUT BROWN	8011
G	3FA1-NGSJ-C65W0	BLUE GREY	7031
H	3FA1-NHSJ-C65W0	HEATHER VIOLET	4003
I	3FA1-NISJ-C65W0	BEIGE	1001
K	3FA1-NKSJ-C65W0	CURRY	1027
L	3FA1-NLSJ-C65W0	CARMINE RED	3002
M	3FA1-NMSJ-C65W0	PASTEL ORANGE	2003
N	3FA1-NNSJ-C65W0	PASTEL GREEN	6019
Z	3FA1-NZSJ-C65W0	WATER BLUE	5021

CUSTOMER OUTLINE DRAWING

ALL OTHER SHEETS ARE FOR INTERNAL USE ONLY

UNLESS OTHERWISE SPECIFIED, DIMENSIONS ARE IN METRIC AND TOLERANCES ARE:

<0.5mm	0.5 - 6mm	6 - 30mm	30 - 120mm	ANGLES
± 0.05mm	±0.1mm	±0.2mm	± 0.3mm	±1°

NOTICE - These drawings, specifications, or other data (1) are, and remain the property of Amphenol corp. (2) must be returned upon requiest; and (3) are confidential and not to be disclosed to any person other than those to whom they are given by Amphenol Corp. the funishing of these drawings, specifications, or other data by Amphenol Corp., or to any other person to anyone for any purpose is not to be regarded by implication or otherwise in any manner licensing, granting rights to permitting such holder or any other sperson to manufacture, use or sell any product, process or design, patented or otherwsie, that may in any way be related to or disclosed by said drawings, specifications, or other data.

MATERIAL

REFERENCE
EAR # 2865 AND

CONFIGURATION LEVEL: RELEASE

FINISH

DRAWN A.LIU	DATE 23-Sep-08	
ENGINEER J.YANG	DATE 23-Sep-08	
APPROVED B.C.GLEISSNER	DATE 23-Sep-08	
CAD FILE I:\FAKRA\3FA1-NXSJ-C65W0		

TITLE
GEN 3.0 FAKRA JACK,
C65 CABLE GROUP,
TAPE AND REEL CONTACT
(SUPPLIED SEPARATELY)

SCALE: 3.0:1.0 | SHEET 2 OF 2

DWG SIZE B | REV A

Amphenol RF
Danbury CT USA, Tainan, Taiwan, Shenzhen, China
www.amphenolrf.com

DRAWING NO. 3FA1-NXSJ-C65W0
ITEM NO. 3FA1-NXSJ-C65W0
PART NO. 3FA1-NXSJ-C65W0