NOTES:

1. MATERIALS AND FINISHES:

   BODY - ZINC ALLOY, MATTE TIN PLATED (.000100" MIN.) OVER NICKEL (.000080" MIN.
   PANEL - BRASS, NICKEL PLATED (.000100" MIN.)
   CONTACT - BRASS, GOLD PLATED (.000030" MIN.)
   INSULATOR - LCP, COLOR: NATURAL
   CLIP - NYLON 4/6, 40% GF, COLOR: PER TABLE

2. ELECTRICAL:

   A. IMPEDANCE: 50 OHM
   B. FREQUENCY RANGE: DC - 4 GHz
   C. VSWR(RETURN LOSS): 1.20 (20.8 dB), MAX.
   D. DIELECTRIC WITHSTANDING VOLTAGE: 750 VRMS, MIN.

3. MECHANICAL:

   A. DURABILITY: 50 CYCLES MIN.
   B. TEMPERATURE RANGE: -40° C TO +105° C

4. PACKAGING:

   A. QUANTITY: SINGLE PACK
   B. MARKING: BAG TO BE MARKED "AMPHENOL, 2FAI-NXRP-PCB-R, AND DATE CODE"

2FAI-NXRP-PCB-R	
PART NO.	
THIRD ANGLE PROJ.	⊕ ◁

REVISIONS

REV	DESCRIPTION	DATE	ECO	APPR
A	RELEASE TO MFG.	16-Aug-06	46209	CPM/BG
B	A) ADDED: GD&T, CHAMFER, MARKING	11/9/06	46340	BCG
C	SEE SHEET 1	17-Sep-07		Angela

CONFIGURATION CONTROL:
NO CHANGES PERMITTED TO DRAWING WITHOUT PPAP QUALIFIED CUSTOMER APPROVAL

CUSTOMER OUTLINE DRAWING

ALL OTHER SHEETS ARE FOR INTERNAL USE ONLY

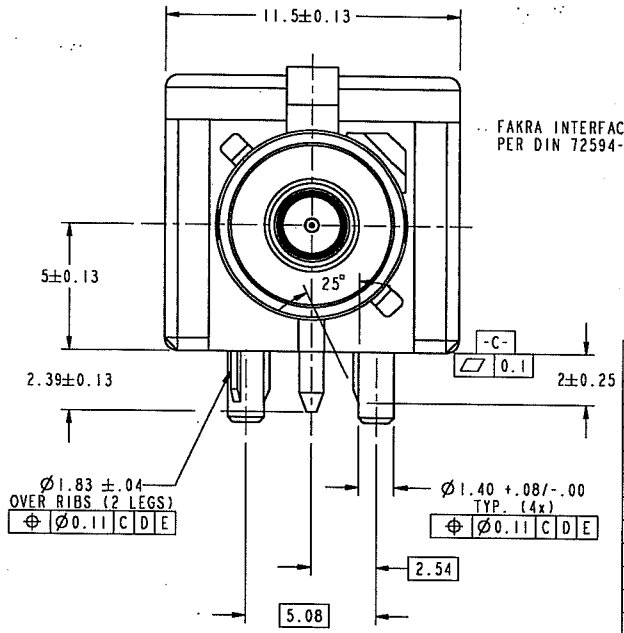

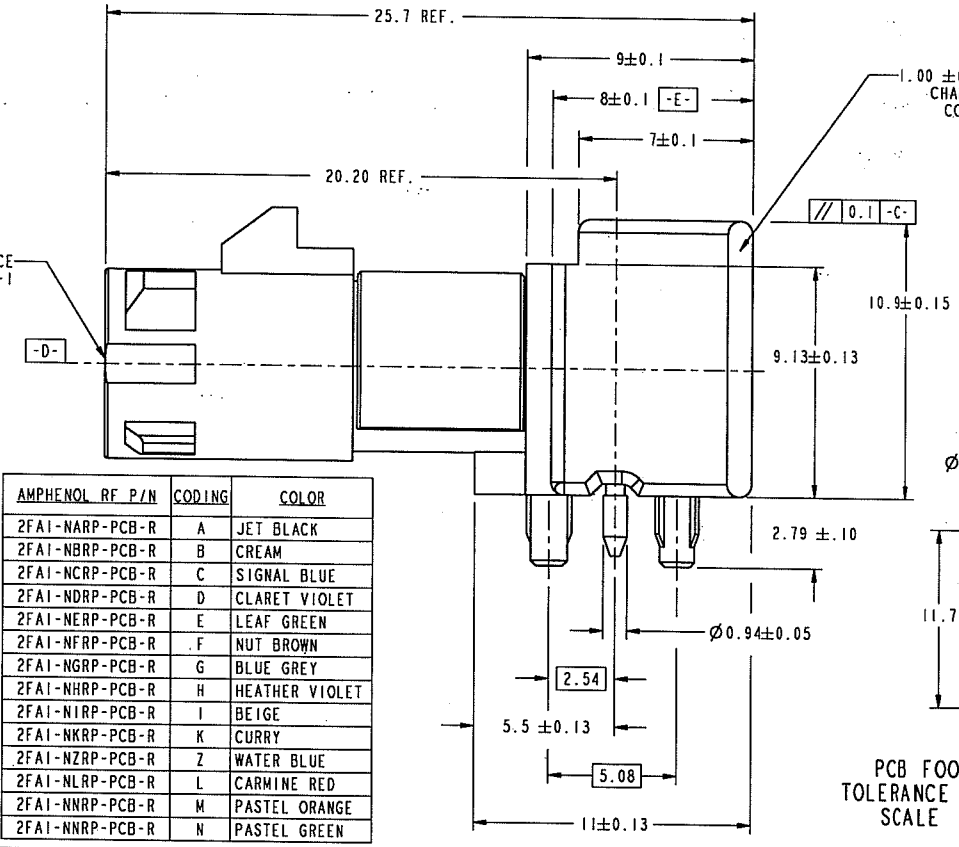

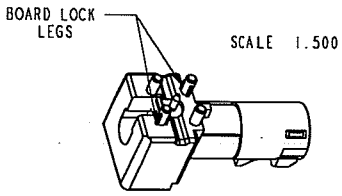

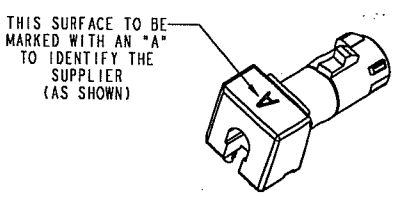

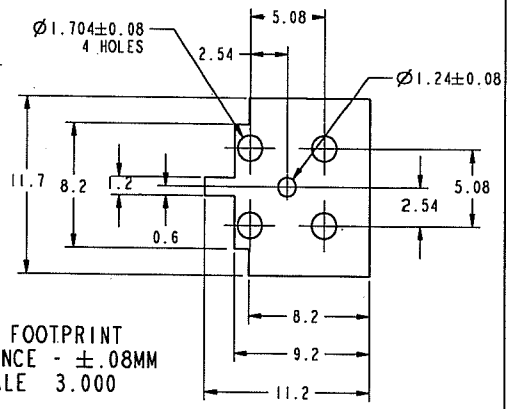

PCB FOOTPRINT
TOLERANCE - ±.08MM
SCALE 3.000

AMPHENOL RF P/N	CODING	COLOR
2FAI-NARP-PCB-R	A	JET BLACK
2FAI-NBRP-PCB-R	B	CREAM
2FAI-NCRP-PCB-R	C	SIGNAL BLUE
2FAI-NDRP-PCB-R	D	CLARET VIOLET
2FAI-NERP-PCB-R	E	LEAF GREEN
2FAI-NFRP-PCB-R	F	NUT BROWN
2FAI-NGRP-PCB-R	G	BLUE GREY
2FAI-NHRP-PCB-R	H	HEATHER VIOLET
2FAI-NIRP-PCB-R	I	BEIGE
2FAI-NKRP-PCB-R	K	CURRY
2FAI-NZRP-PCB-R	Z	WATER BLUE
2FAI-NLRP-PCB-R	L	CARMINE RED
2FAI-NNRP-PCB-R	M	PASTEL ORANGE
2FAI-NNRP-PCB-R	N	PASTEL GREEN

METRIC DRAWING

UNLESS OTHERWISE SPECIFIED, DIMENSIONS ARE METRIC AND TOLERANCES ARE:
1 PLACE DECIMAL ± 0.3MM (.012") | 2 PLACE DECIMAL ± .10 MM (.004") | ANGLES ± 1°

NOTICE - These drawings, specifications, or other data (1) are, and remain the property of Amphenol corp. (2) must be returned upon requiest; and (3) arre confidential and not to be disclosed to any person other than those to whom they are given by Amphenol Corp. the funishing of these drawings, specifications, or other data by Amphenol Corp., or to any other person to anyone for any purpose is not to be regarded by implicatioin or otherwise in any manner licensing, granting rights to permitting such holder or any other sperson to manufacture, use or sell any product, process or design, patented or otherwsie, that may in any way be related to or disclosed by said drawings, specifications, or other data.

MATERIAL

REFERENCE
EAR #1943 AND 615X-2143-100-X

CONFIGURATION LEVEL: Released

FINISH

DRAWN C. McGRATH	DATE 04-Aug-06	
ENGINEER B. C. GLEISSNER	DATE 04-Aug-06	
APPROVED O. BARTHELMES	DATE 11/8/06	
CAD FILE Root Folder/FAKRA/2FAI-NXRP-PCB-R		

TITLE
ASSEMBLY
FAKRA, PLUG

SCALE: 5.0:1.0	SHEET 2 OF 2	
CODE ID B	DWG SIZE 74868	REV C

Amphenol RF
Danbury CT USA, Tainan, Taiwan, Shenzhen, China
www.amphenolrf.com

DRAWING NO.	2FAI-NXRP-PCB-R
ITEM NO.	2FAI-NXRP-PCB-R
PART NO.	2FAI-NXRP-PCB-R