REV.	DATE	DESCRIPTION
NC	11/10/03	INITIAL RELEASE

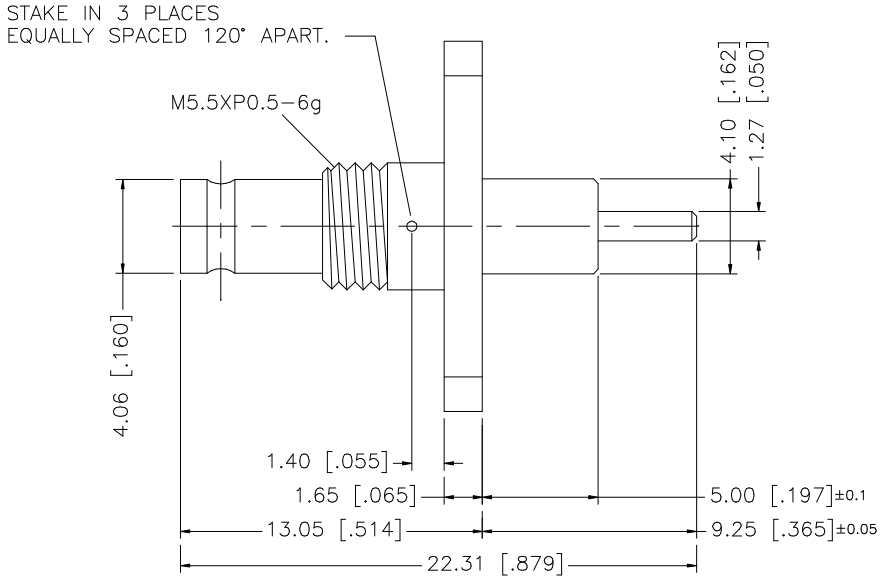

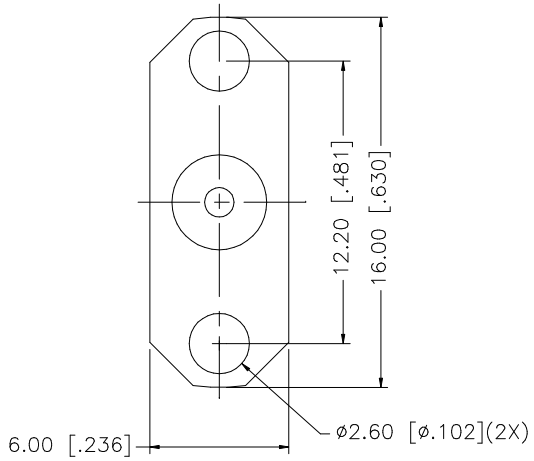

NOTE:

1. IMPEDANCE: 50ohm
2. FREQUENCY RANGE: 0–4 GHz
3. WORKING VOLTAGE: 360 V
4. TEMPERATURE RANGE: –65° ~ +125°C
5. CONNECTOR ACCORDING TO NF C 93–571
6. PACKING IN TRAY WITH COMMERCIAL PART NUMBER AND DATE CODE.

	DESCRIPTION	MATERIAL	FINISH	QTY
8				
7				
6				
5				
4				
3	CONTACT PIN	BER. COPPER	GOLD	1
2	INSULATOR	PTFE	NATURAL	1
1	BODY	BRASS	GOLD	1

UNLESS OTHERWISE SPECIFIED DIMENSIONS ARE IN MILLIMETERS. DIMENSIONS IN [ ] ARE IN INCHES AND FOR CUSTOMER REFERANCE ONLY.

UNLESS OTHERWISE SPECIFIED TOLERANCES FOR MILLIMETERS ARE:
0.5 – 8mm ± 0.20mm
8 – 30mm ± 0.40mm
30 – 120mm ± 0.50mm

UNLESS OTHERWISE SPECIFIED TOLERANCES FOR INCHES ARE:
.020 – .315 = ± 0.007"
.315 – 1.180 = ± 0.015"
1.180 – 4.724 = ± 0.020"

DO NOT SCALE DRAWING

APPROVALS		DATE
DRAWN	G.R.S.	11/10/03
CHECKED		
ISSUED		
SHEET	1 OF 1	
CAD FILE	C:/282/282112–12.DWG	

Amphenol Connex

PART DESCRIPTION
1.0/2.3 PANEL RECEPTACLE JACK
WITH FLANGE MOUNT (.197 – .365)

PART NO. 282112–12

DWG. NO.	REV.	SIZE	SCALE
282112–12.DWG	NC	A	NA