REV.	DATE	DESCRIPTION
NC	06/25/07	INITIAL RELEASE
A	08/23/07	REVISE CALLOUT ON FLATS AND MODIFY NOTES

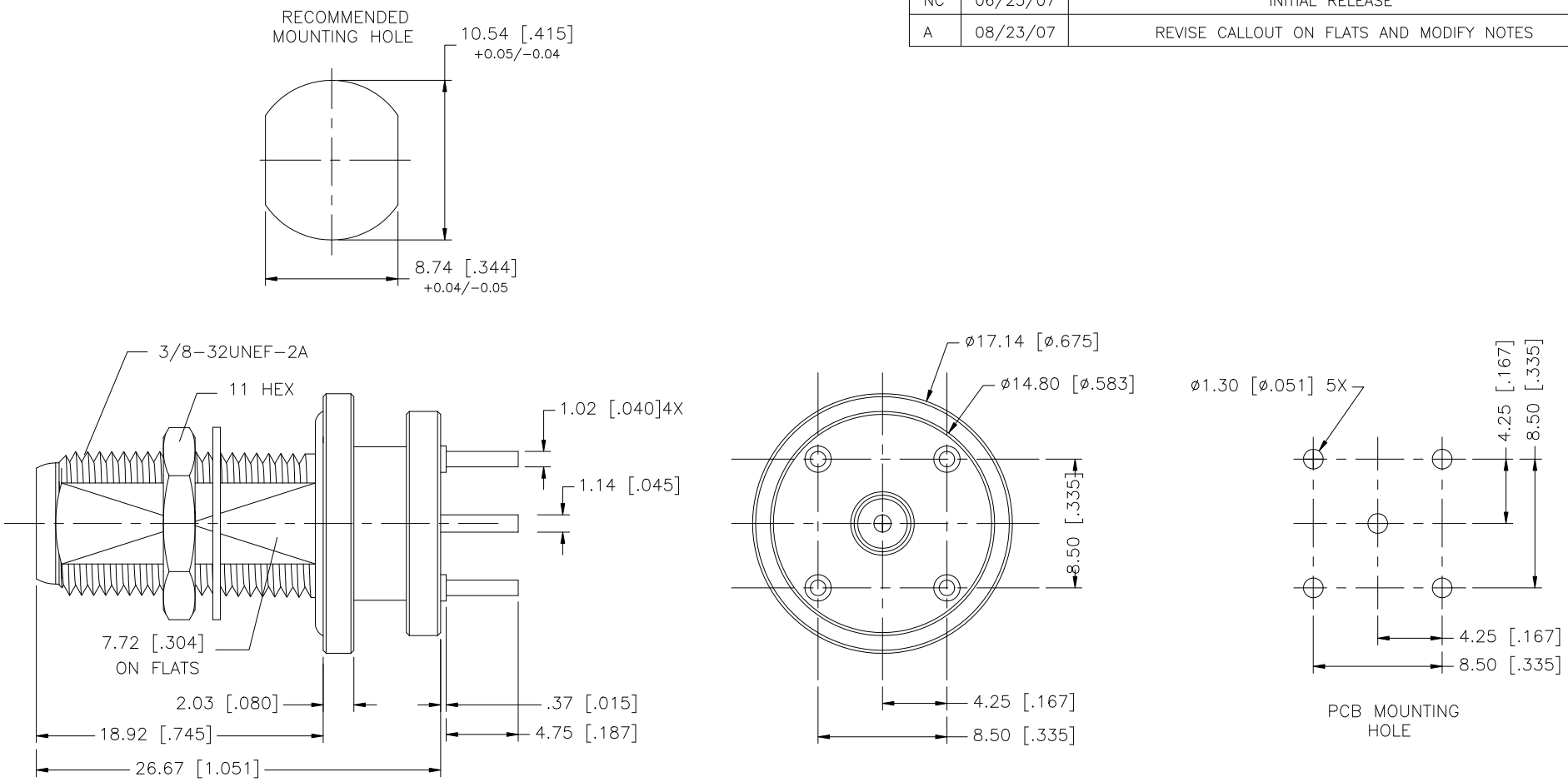

NOTES:

1. ELECTRICAL: IMPEDANCE 50ohm
2. MAX. PANEL THICKNESS = 10mm
3. ACCEPTS ø0.94 [23.87] ~ ø1.09 [27.69] CENTER CONDUCTOR TYPICAL.

	DESCRIPTION	MATERIAL	FINISH	QTY
8				
7				
6	HEX NUT	BRASS	NICKEL	1
5	LOCK WASHER	BRASS	NICKEL	1
4	GASKET	SILICONE	RED	1
3	CONTACT PIN	BER. COPPER	GOLD	1
2	INSULATOR	TEFLON	NATURAL	1
1	BODY	BRASS	NICKEL	1

UNLESS OTHERWISE SPECIFIED DIMENSIONS ARE IN MILLIMETERS. DIMENSIONS IN [ ] ARE IN INCHES AND FOR CUSTOMER REFERANCE ONLY.

UNLESS OTHERWISE SPECIFIED TOLERANCES FOR MILLIMETERS ARE:
0.5 – 8mm ± 0.20mm
8 – 30mm ± 0.40mm
30 – 120mm ± 0.50mm

UNLESS OTHERWISE SPECIFIED TOLERANCES FOR INCHES ARE:
.020 – .315 = ± 0.007"
.315 – 1.180 = ± 0.015"
1.180 – 4.724 = ± 0.020"

DO NOT SCALE DRAWING

APPROVALS		DATE
DRAWN	G.R.S.	08/23/07
CHECKED		
ISSUED		
SHEET	1 OF 1	

CAD FILE C:/222/222201.DWG

Amphenol Connex

PART DESCRIPTION
F BULKHEAD P.C.B. MOUNT RECEPTACLE JACK

PART NO. 222201

DWG. NO. 222201.DWG | REV. A | SIZE A | SCALE NA