REV.	DATE	DESCRIPTION
NC	01/05/06	INITIAL RELEASE
A	01/31/06	ADD CONTACT DIAMETER AND LENGTH DIMENSION AND NOTE 1.
B	07/28/06	REVISE OVERALL BODY DIMENSIONS

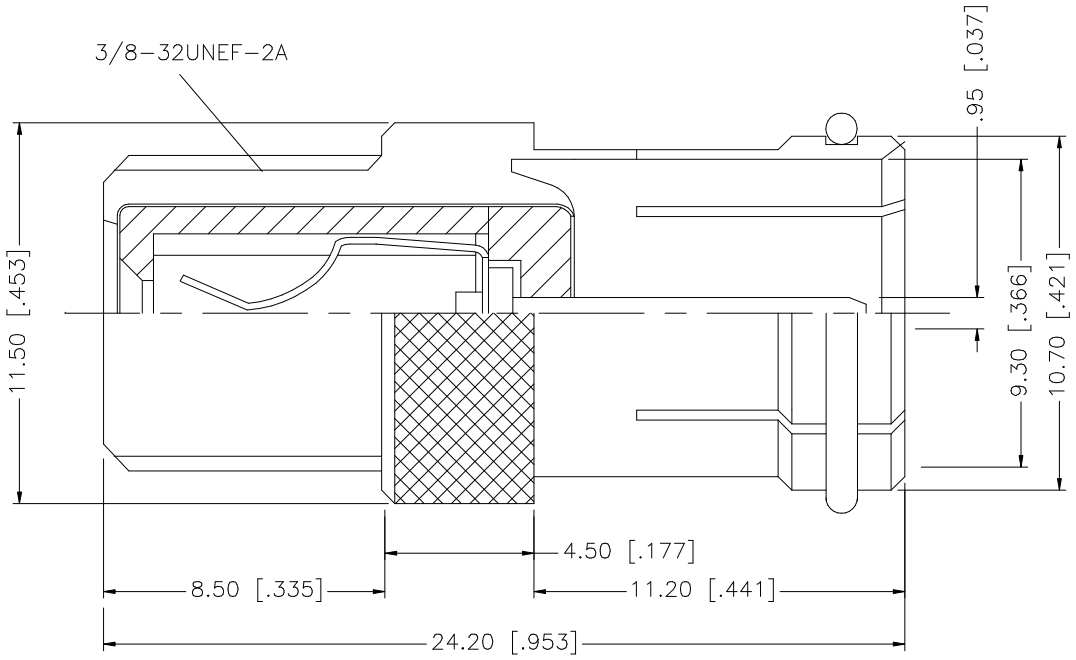

NOTE:

1. FEMALE CONTACT ACCEPTS MALE CONTACT FROM 0.50 [0.019”] TO 1.05 [.041”].

	DESCRIPTION	MATERIAL	FINISH	QTY
8				
7				
6				
5				
4	CONTACT PIN	BRASS	BRIGHT TIN	1
3	INSULATOR	P.P.	NATURAL	1
2	INSULATOR	DELRIN	NATURAL	1
1	BODY	BRASS	NICKEL	1

UNLESS OTHERWISE SPECIFIED DIMENSIONS ARE IN MILLIMETERS. DIMENSIONS IN [ ] ARE IN INCHES AND FOR CUSTOMER REFERANCE ONLY.

UNLESS OTHERWISE SPECIFIED TOLERANCES FOR MILLIMETERS ARE:
0.5 – 8mm ± 0.20mm
8 – 30mm ± 0.40mm
30 – 120mm ± 0.50mm

UNLESS OTHERWISE SPECIFIED TOLERANCES FOR INCHES ARE:
.020 – .315 = ± 0.007”
.315 – 1.180 = ± 0.015”
1.180 – 4.724 = ± 0.020”

DO NOT SCALE DRAWING

APPROVALS		DATE
DRAWN	G.R.S.	07/28/06
CHECKED		
ISSUED		
SHEET	1 OF 1	

CAD FILE C:/222/222157–10.DWG

Amphenol Connex

PART DESCRIPTION: F JACK TO QUICK DISCONNECT PLUG ADAPTER

PART NO. 222157–10

DWG. NO.	REV.	SIZE	SCALE
222157–10.DWG	B	A	NA