REV.	DATE	DESCRIPTION
NC	07/31/04	INITIAL RELEASE

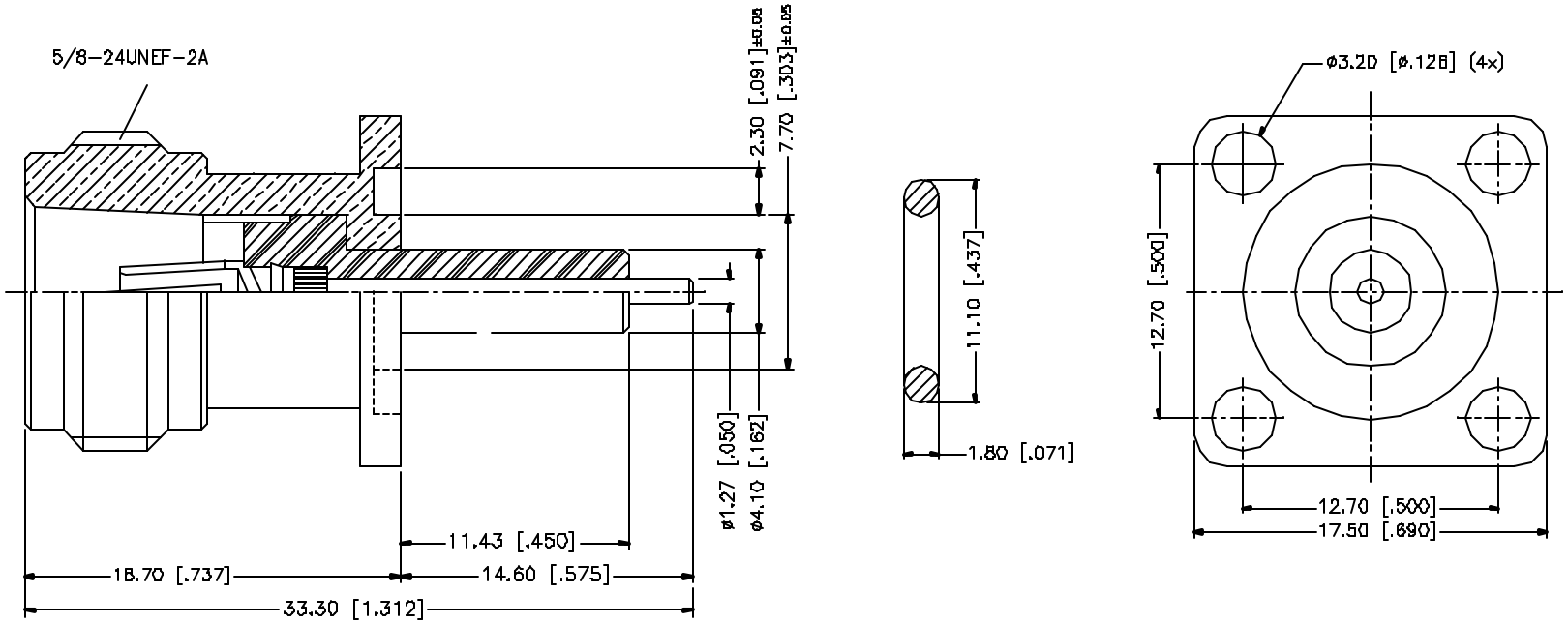

8				
7				
6				
5				
4	GASKET	SILICONE	RED	1
3	CONTACT PIN	PHOS. BRONZE	GOLD	1
2	INSULATOR	TEFLON	NATURAL	1
1	BODY	BRASS	NICKEL	1
	DESCRIPTION	MATERIAL	FINISH	QTY

UNLESS OTHERWISE SPECIFIED DIMENSIONS ARE IN MILLIMETERS. DIMENSIONS IN [ ] ARE IN INCHES AND FOR CUSTOMER REFERANCE ONLY.

UNLESS OTHERWISE SPECIFIED TOLERANCES FOR MILLIMETERS ARE:
0.5 – 6mm ± 0.20mm
6 – 30mm ± 0.40mm
30 – 120mm ± 0.50mm

UNLESS OTHERWISE SPECIFIED TOLERANCES FOR INCHES ARE:
.020 – .315 = ± 0.007"
.315 – 1.180 = ± 0.015"
1.180 – 4.724 = ± 0.020"

DO NOT SCALE DRAWING

APPROVALS	DATE
DRAWN G.R.S.	07/31/04
CHECKED	
ISSUED	
SHEET 1 OF 1	

CAD FILE C:/172/172224-16.DWG

Amphenol Connex

PART DESCRIPTION: N PANEL RECEPTACLE EXTENDED TEFLON (.450/.575)

PART NO. 172224-16

DWG. NO. 172224-16.DWG | REV. NC | SIZE A | SCALE NA