REV.	DATE	DESCRIPTION
NC	07/30/02	INITIAL RELEASE

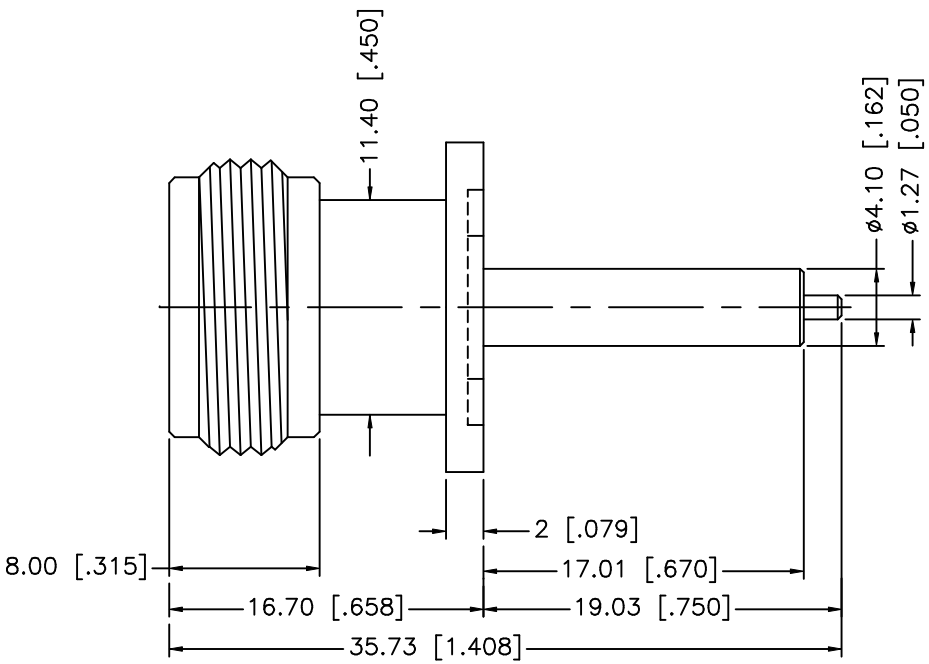

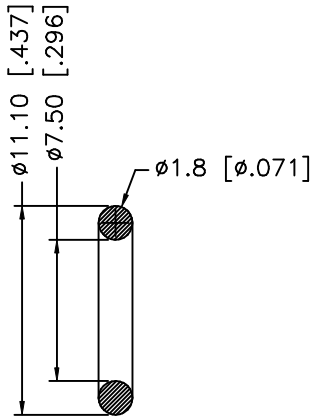

GASKET

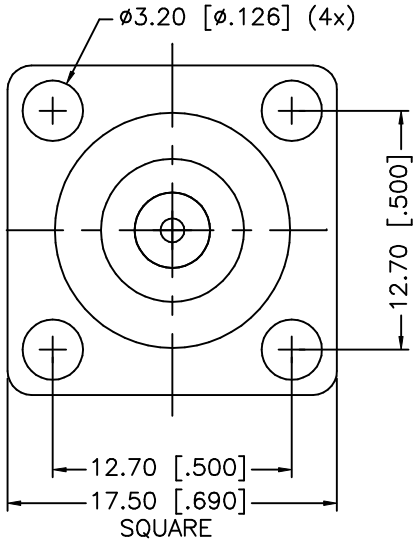

8			
7			
6			
5			
4	GASKET	SILICONE	RED
3	CONTACT PIN	PHOS. BRONZE	GOLD
2	INSULATOR	TEFLON	NATURAL
1	BODY	BRASS	GOLD
	DESCRIPTION	MATERIAL	FINISH

UNLESS OTHERWISE SPECIFIED DIMENSIONS ARE IN MILLIMETERS

DIMENSIONS IN [ ] ARE IN INCHES FOR CUSTOMER REFERANCE ONLY

UNLESS OTHERWISE SPECIFIED TOLERANCES FOR INCHES ARE:

.XXX = ± 0.005"
.XX = ± 0.010"
.X = ± 0.020"

DO NOT SCALE DRAWING

APPROVALS		DATE
DRAWN	G.R.S.	07/30/02
CHECKED		
ISSUED		

Amphenol - Connex
CONNECTOR CORPORATION

TITLE: N PANEL RECEPTACLE JACK

SIZE	FSCM NO.	DWG. NO.	REV.
A	99001	172183-10.DWG	NC
SCALE NA	PART NO. 172183-10	SHEET 1 OF 1	