REV.	DATE	DESCRIPTION
A	05/01/04	UPDATE DRAWING FORMAT

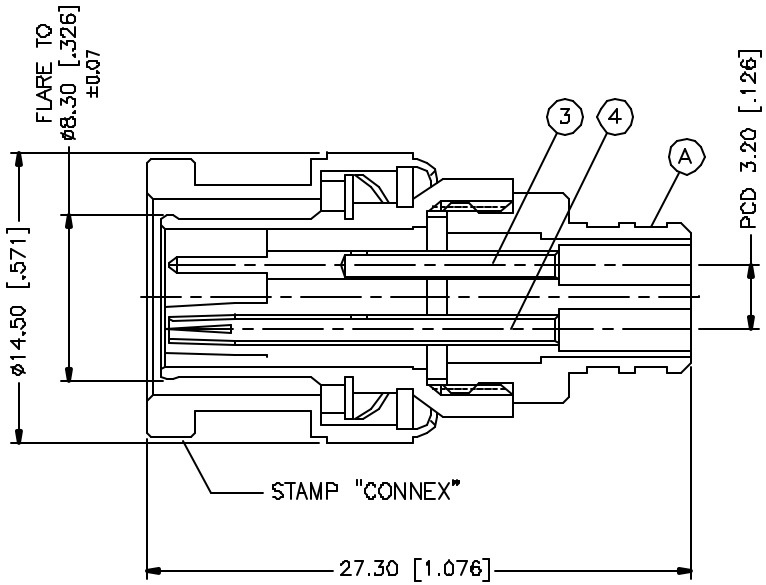

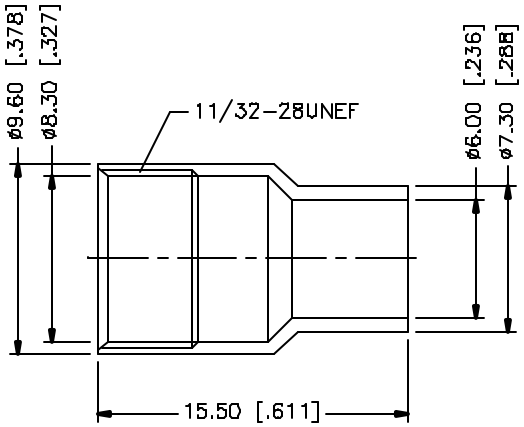

NOTE:

1. CONTACT PIN TO SOLDER.

	DESCRIPTION	MATERIAL	FINISH	QTY
8				
7				
6				
5	FERRULE	COPPER	NICKEL	1
4	CONTACT PIN	PHOS. BRONZE	GOLD	1
3	CONTACT PIN	BRASS	GOLD	1
2	INSULATOR	PBT	WHITE	1
1	BODY	BRASS	NICKEL	1

UNLESS OTHERWISE SPECIFIED DIMENSIONS ARE IN MILLIMETERS. DIMENSIONS IN [ ] ARE IN INCHES AND FOR CUSTOMER REFERENCE ONLY.

UNLESS OTHERWISE SPECIFIED TOLERANCES FOR MILLIMETERS ARE:
0.5 – 8mm ± 0.20mm
8 – 30mm ± 0.40mm
30 – 120mm ± 0.60mm

UNLESS OTHERWISE SPECIFIED TOLERANCES FOR INCHES ARE:
.020 – .315 = ± 0.007"
.315 – 1.180 = ± 0.015"
1.180 – 4.724 = ± 0.020"

DO NOT SCALE DRAWING

APPROVALS		DATE
DRAWN	G.R.S.	05/01/04
CHECKED		
ISSUED		
SHEET	1 OF 1	

CAD FILE C:/162/162108-10.DWG

Amphenol Connex

PART DESCRIPTION
BNC TWIN PLUG
(FOR CA-0196 SYNC CABLE)

PART NO. 162108-10

DWG. NO.	REV.	SIZE	SCALE
162108-10.DWG	A	A	NA