REV.	DATE	ECR NO.	DESCRIPTION
NC	02/19/99	XXXXXX	INITIAL RELEASE
A	05/07/11	XXXXXX	UPDATE DRAWING FORMAT

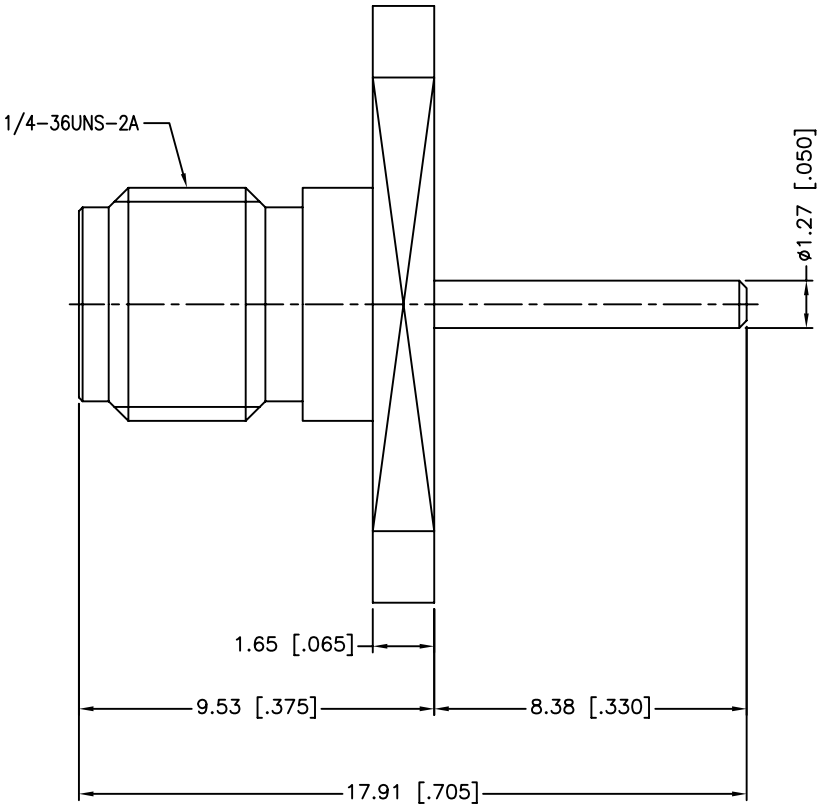

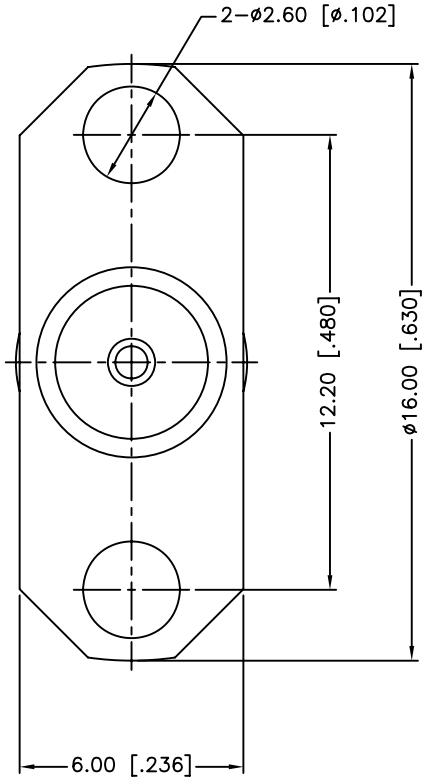

REFERANCE: W50130G-010

3	CONTACT PIN	BERYLLIUM COPPER	GOLD	1
2	INSULATOR	PTFE	NATURAL	1
1	BODY	BRASS	GOLD	1
	DESCRIPTION	MATERIAL	FINISH	QTY

UNLESS OTHERWISE SPECIFIED DIMENSIONS ARE IN MILLIMETERS. DIMENSIONS IN [ ] ARE IN INCHES AND FOR CUSTOMER REFERANCE ONLY.

UNLESS OTHERWISE SPECIFIED TOLERANCES FOR MILLIMETERS ARE:

0.5 – 8mm ± 0.20mm
8 – 30mm ± 0.40mm
30 – 120mm ± 0.50mm

UNLESS OTHERWISE SPECIFIED TOLERANCES FOR INCHES ARE:

.020 – .315 = ± 0.007"
.315 – 1.180 = ± 0.015"
1.180 – 4.724 = ± 0.020"

DO NOT SCALE DRAWING

APPROVALS		DATE
DRAWN	M.ZHANG	05/07/11
CHECKED		
ISSUED		
SHEET	1 OF 1	

CAD FILE C:/CONNEX/132262.DWG

Amphenol Connex

PART DESCRIPTION
SMA PANEL RECEPT. JACK, 2 HOLE FLANGE, EXTENDED TEFLON/CONTACT(0/.330")

PART NO. 132262

DWG. NO. 132262.DWG | REV. A | SIZE A | SCALE NA