REV.	DATE	ECR NO.	DESCRIPTION
NC	06/30/10	XXXXXX	INITIAL RELEASE

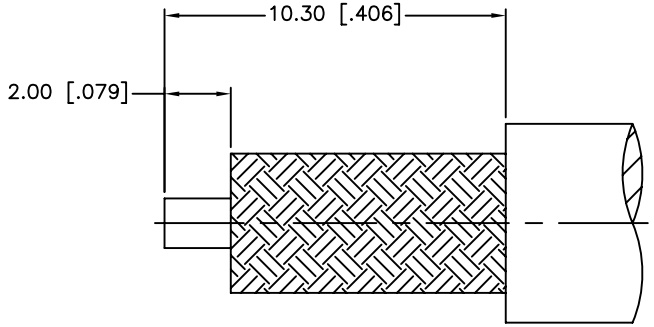

RECOMMENDED
CABLE STRIPPING DIM'S

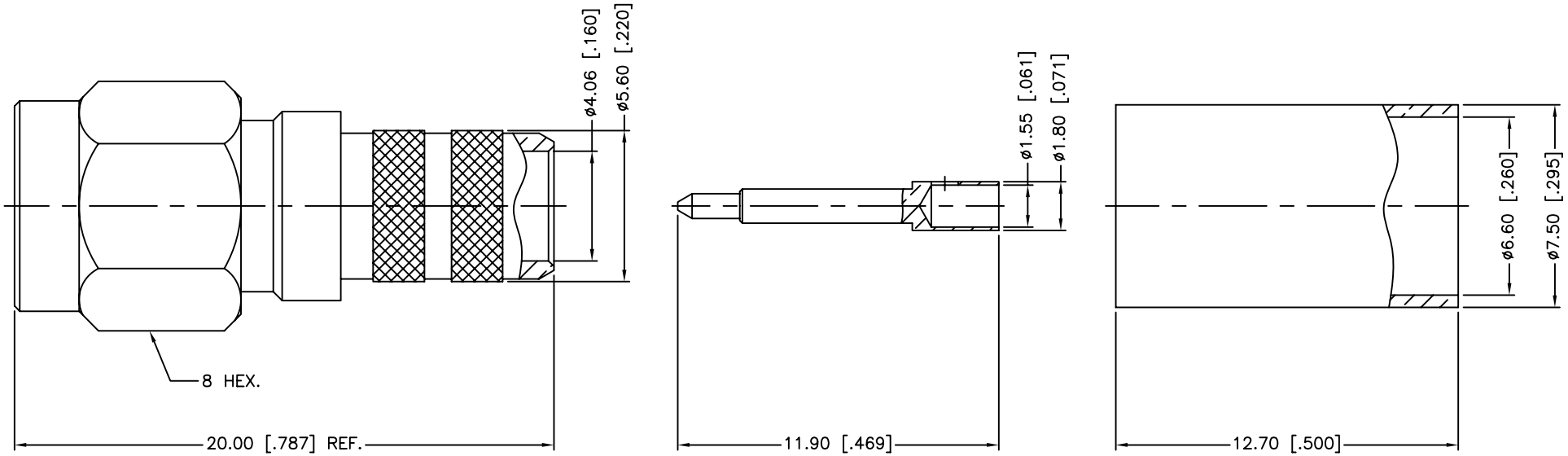

1. CRIMPED FERRULE
   HEX CRIMP SIZE .255"
2. CONTACT PIN TO SOLDER

	DESCRIPTION	MATERIAL	FINISH	QTY
7	FERRULE	BRASS	NICKEL	1
6	CONTACT PIN	BRASS	GOLD	1
5	GASKET	SILICONE	RED	1
4	RETAINER RING	SUS 304	NATURAL	1
3	INSULATOR	PTFE	NATURAL	1
2	BODY	BRASS	NICKEL	1
1	SHELL	BRASS	NICKEL	1

UNLESS OTHERWISE SPECIFIED DIMENSIONS ARE IN MILLIMETERS. DIMENSIONS IN [ ] ARE IN INCHES AND FOR CUSTOMER REFERANCE ONLY.

UNLESS OTHERWISE SPECIFIED TOLERANCES FOR MILLIMETERS ARE:
0.5 – 8mm ± 0.20mm
8 – 30mm ± 0.40mm
30 – 120mm ± 0.50mm

UNLESS OTHERWISE SPECIFIED TOLERANCES FOR INCHES ARE:
.020 – .315 = ± 0.007"
.315 – 1.180 = ± 0.015"
1.180 – 4.724 = ± 0.020"

DO NOT SCALE DRAWING

APPROVALS		DATE
DRAWN	M.ZHANG	06/30/10
CHECKED		
ISSUED		
SHEET	1 OF 1	
CAD FILE	C:/CONNEX/132231N.DWG	

Amphenol Connex

PART DESCRIPTION
SMA CRIMP PLUG
(FOR RG-8/X, LMR-240 CABLE)

PART NO. 132231N

DWG. NO. 132231N.DWG | REV. NC | SIZE A | SCALE NA