REV.	DATE	DESCRIPTION
NC	05/10/01	INITIAL RELEASE

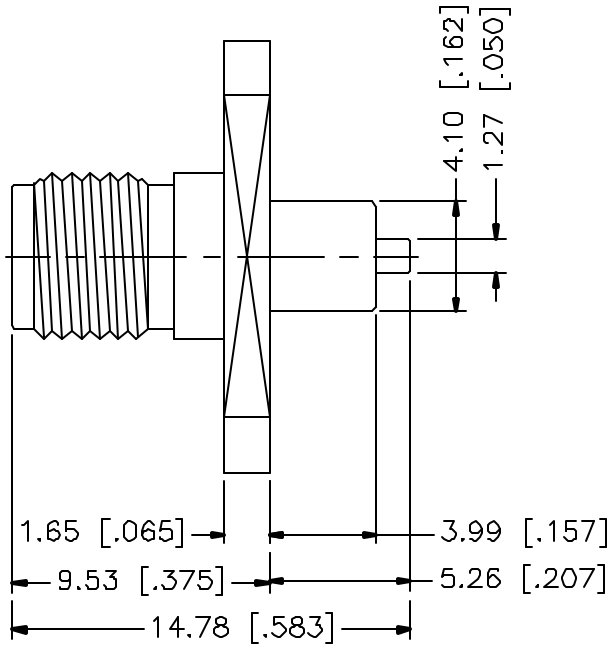

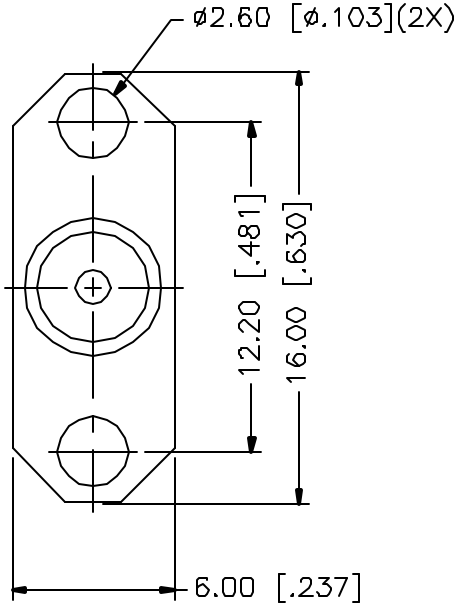

	DESCRIPTION	MATERIAL	FINISH
1	BODY	BRASS	GOLD
2	INSULATOR	TEFLON	NATURAL
3	CONTACT PIN	BER. COPPER	GOLD
4			
5			
6			
7			
8			

UNLESS OTHERWISE SPECIFIED DIMENSIONS ARE IN MILLIMETERS

DIMENSIONS IN [ ] ARE IN INCHES FOR CUSTOMER REFERANCE ONLY

UNLESS OTHERWISE SPECIFIED TOLERANCES FOR MILLIMETERS ARE

0.5–6 = ± 0.2
6–30 = ± 0.4
30–120 = ± 0.6
120–315 = ± 1
315–1000 = ± 1.6
1000–2000 = ± 2.4

DO NOT SCALE DRAWING

APPROVALS		DATE
DRAWN	G.R.S.	05/10/01
CHECKED		
ISSUED		

Connector Corporation

TITLE: SMA BULKHEAD RECEPTACLE EXTENDED TEFLON

SIZE	FSCM NO	DWG. NO	REV.
A	99001	132147–18.DWG	NC

SCALE	PART NO.	SHEET
NA	132147–18	1 OF 1