REV.	DATE	DESCRIPTION
NC	01/24/05	INITIAL RELEASE

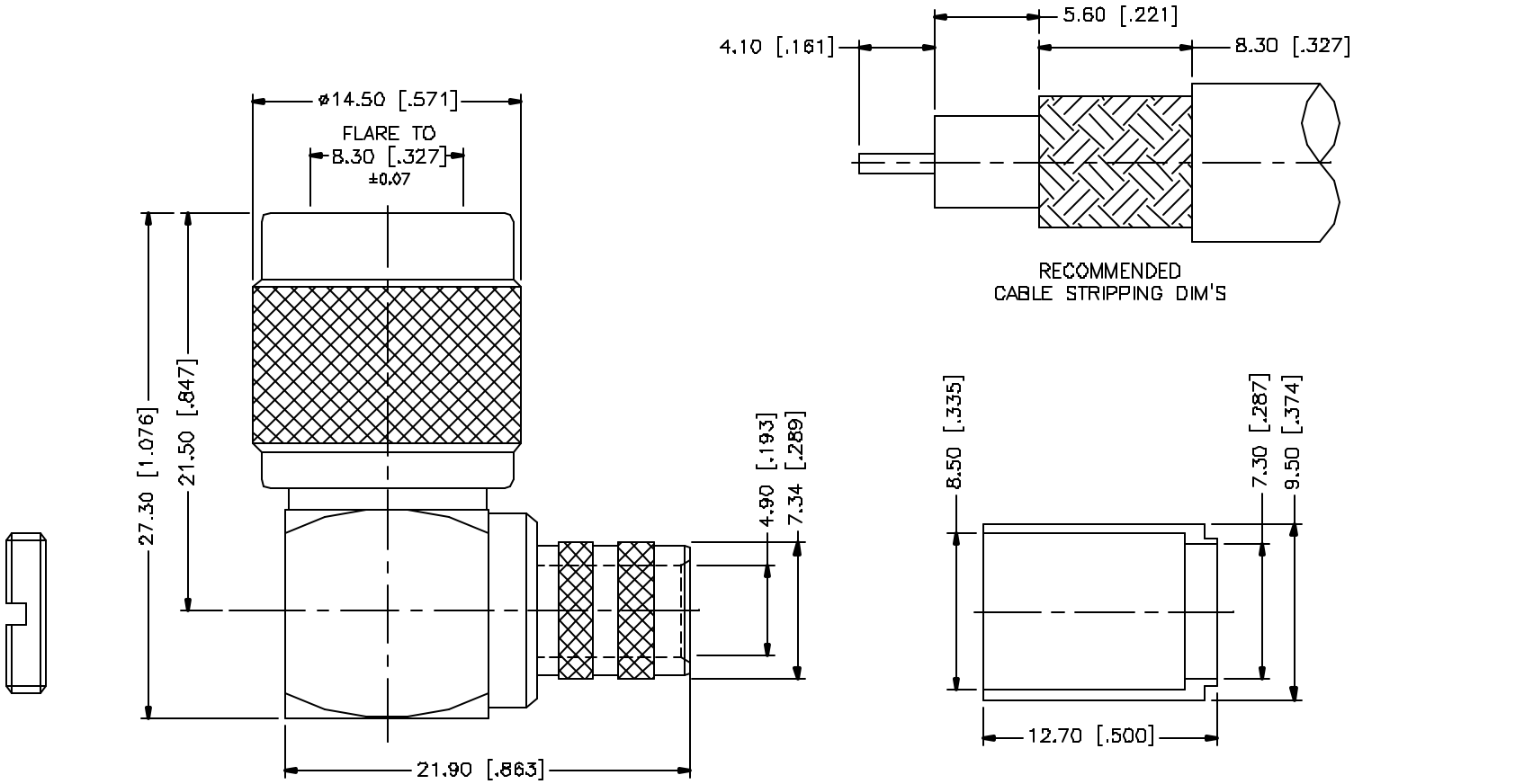

NOTE:

1. CRIMPED FERRULE
   HEX CRIMP SIZE .324"
2. CONTACT PIN TO SOLDER

	DESCRIPTION	MATERIAL	FINISH	QTY
8				
7				
6				
5	NUT	BRASS	NICKEL	1
4	FERRULE	COPPER	NICKEL	1
3	CONTACT PIN	BRASS	GOLD	1
2	INSULATOR	DELRIN	NATURAL	1
1	BODY	BRASS	NICKEL	1

UNLESS OTHERWISE SPECIFIED DIMENSIONS ARE IN MILLIMETERS. DIMENSIONS IN [ ] ARE IN INCHES AND FOR CUSTOMER REFERANCE ONLY.

UNLESS OTHERWISE SPECIFIED TOLERANCES FOR MILLIMETERS ARE:
0.5 – 8mm ± 0.20mm
8 – 30mm ± 0.40mm
30 – 120mm ± 0.50mm

UNLESS OTHERWISE SPECIFIED TOLERANCES FOR INCHES ARE:
.020 – .315 = ± 0.007"
.315 – 1.180 = ± 0.015"
1.180 – 4.724 = ± 0.020"

DO NOT SCALE DRAWING

APPROVALS		DATE
DRAWN	G.R.S.	01/24/05
CHECKED		
ISSUED		
SHEET	1 OF 1	
CAD FILE	C:/122/122506.DWG	

Amphenol Connex

PART DESCRIPTION
TNC R/A CRIMP PLUG
(FOR BELDEN 1694A)

PART NO. 122506

DWG. NO.	REV.	SIZE	SCALE
122506.DWG	A	A	NA