| REV. | DATE | DESCRIPTION |
|---|---|---|
| NC | 02/21/03 | INITIAL RELEASE |

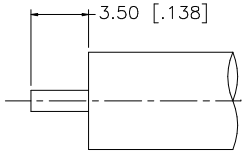


RECOMMENDED CABLE STRIPPING DIMENSIONS

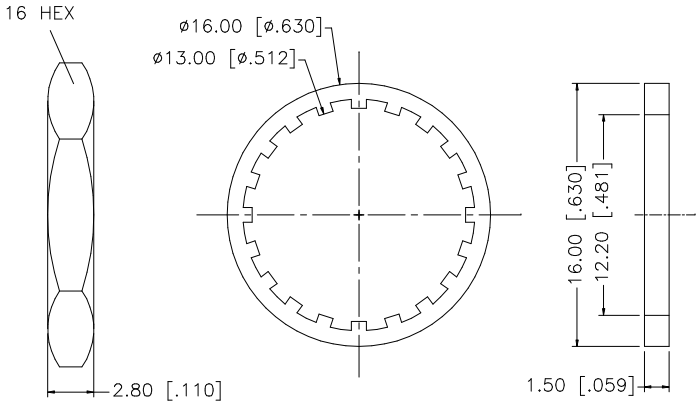


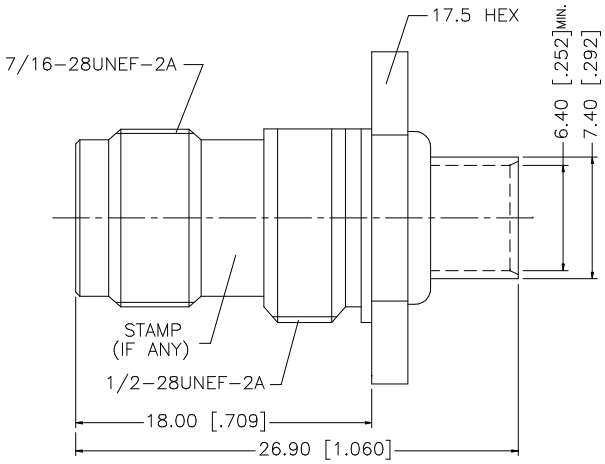


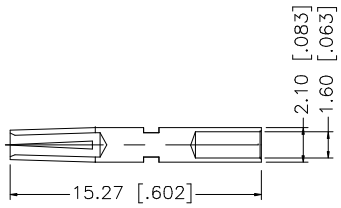


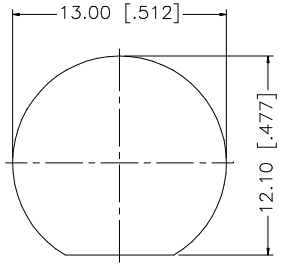


RECOMMENDED MOUNTING HOLE

NOTE:

1. CONTACT PIN TO SOLDER

| | DESCRIPTION | MATERIAL | FINISH | QTY |
|---|---|---|---|---|
| 8 | | | | |
| 7 | | | | |
| 6 | HEX NUT | BRASS | NICKEL | 1 |
| 5 | LOCK WASHER | BRASS | NICKEL | 1 |
| 4 | GASKET | RUBBER | RED | 1 |
| 3 | CONTACT PIN | PHOS. BRONZE | GOLD | 1 |
| 2 | INSULATOR | TEFLON | NATURAL | 1 |
| 1 | BODY/HOUSING | BRASS | NICKEL | 1 |

UNLESS OTHERWISE SPECIFIED DIMENSIONS ARE IN MILLIMETERS. DIMENSIONS IN [ ] ARE IN INCHES AND FOR CUSTOMER REFERANCE ONLY.

UNLESS OTHERWISE SPECIFIED TOLERANCES FOR MILLIMETERS ARE:
0.5 – 8mm ± 0.20mm
8 – 30mm ± 0.40mm
30 – 120mm ± 0.50mm

UNLESS OTHERWISE SPECIFIED TOLERANCES FOR INCHES ARE:
.020 – .315 = ± 0.007"
.315 – 1.180 = ± 0.015"
1.180 – 4.724 = ± 0.020"

DO NOT SCALE DRAWING

| APPROVALS | | DATE |
|---|---|---|
| DRAWN | G.R.S. | 02/21/03 |
| CHECKED | | |
| ISSUED | | |
| SHEET | 1 OF 1 | |
| CAD FILE | C:/122/122489.DWG | |

Amphenol Connex

PART DESCRIPTION
TNC BULKHEAD DIRECT SOLDER JACK
(FOR .250" SEMI-RIGID CABLE)

PART NO. 122489

DWG. NO. 122489.DWG | REV. NC | SIZE A | SCALE NA