REV.	DATE	DESCRIPTION
NC	04/01/98	INITIAL RELEASE

DIMENSION NOTES:

L1=6.5mm MAX.
L= 30.0mm

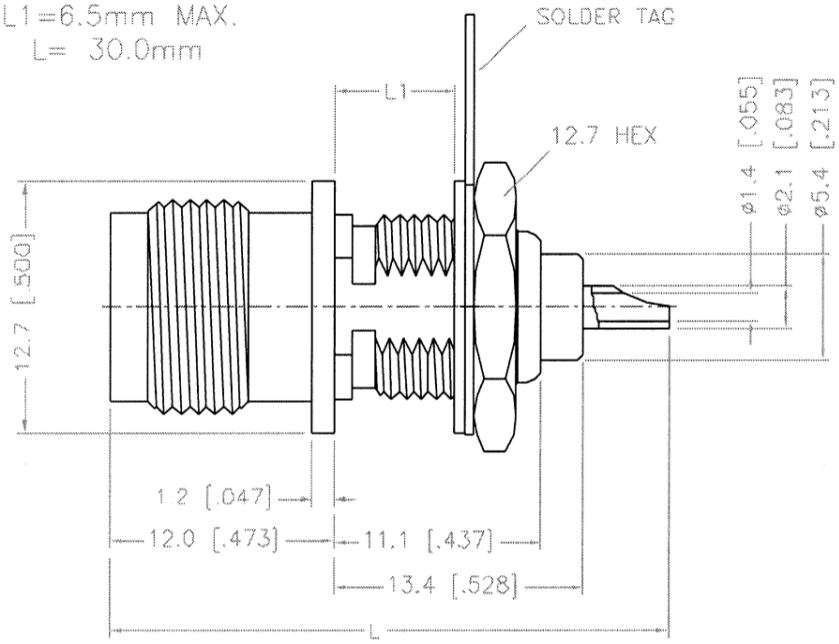

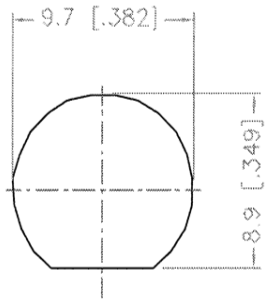

RECOMMENDED
MOUNTING HOLE

	DESCRIPTION	MATERIAL	FINISH
1	BODY	BRASS	NICKEL
2	INSULATOR	DELRIN	NATURAL
3	CONTACT PIN	PHOS. BRONZE	GOLD
4	FERRULE	COPPER	NICKEL
5	HEX NUT	BRASS	NICKEL
6			
7			
8			

UNLESS OTHERWISE SPECIFIED DIMENSIONS ARE IN MILLIMETERS

DIMENSIONS IN [ ] ARE IN INCHES FOR CUSTOMER REFERANCE ONLY

UNLESS OTHERWISE SPECIFIED TOLERANCES FOR MILLIMETERS ARE:
0.5-6 = ± 0.2
6-30 = ± 0.4
30-120 = ± 0.6
120-315 = ± 1
315-1000 = ± 1.6
1000-2000 = ± 2.4

DO NOT SCALE DRAWING

APPROVALS		DATE
DRAWN	G.R.S.	04/01/98
CHECKED		
ISSUED		

connex
Connector Corporation

TITLE: BULKHEAD RECEPTACLE JACK (75 ohm)

SIZE	FSCM NO.	DWG. NO.	REV.
A	99001	122335.DWG	NC

SCALE	PART NO.	SHEET
NA	122335	1 OF 1