122323	REVISIONS				
DRAWING NO.	REV	DESCRIPTION	DATE	ECO	APPR
THIRD ANGLE PROJ.	A	RELEASE TO MFG.	25-Mar-11	--	CL

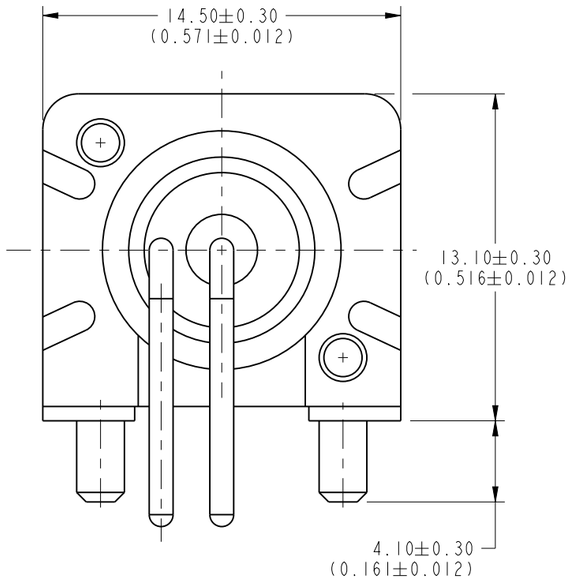

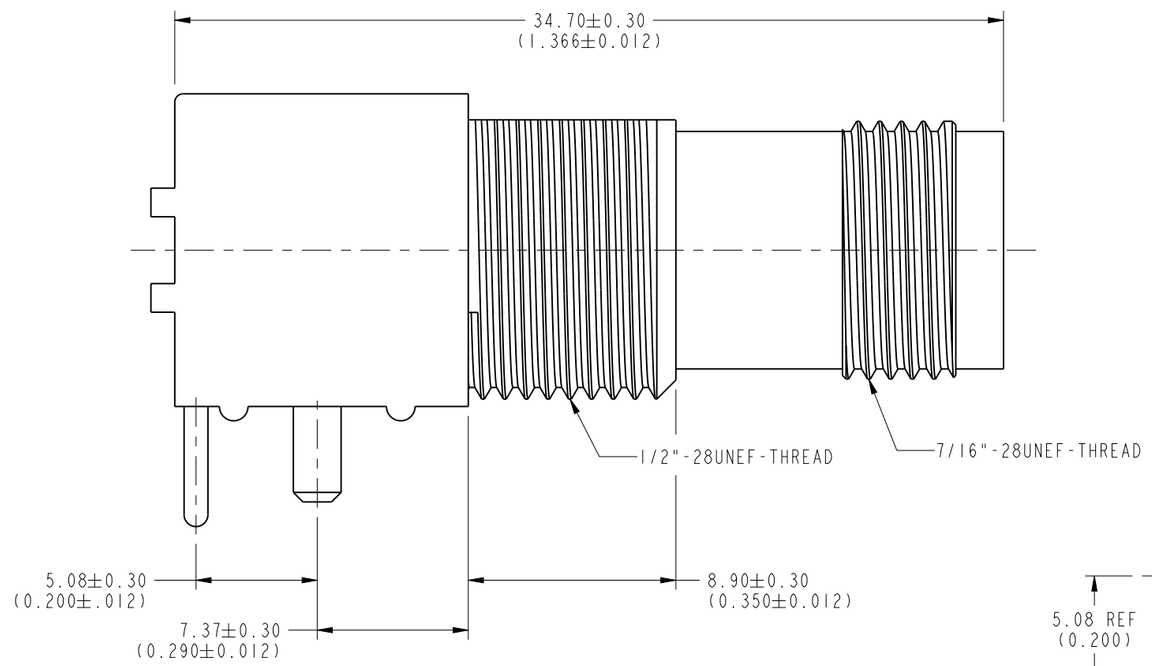

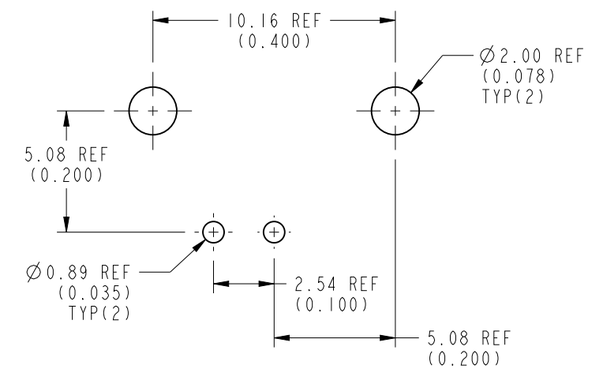

RECOMMEND PCB LAYOUT

SPECIFICATIONS:

1.ELECTRICAL CHARACTERISTICS:
- NORMAL IMPEDANCE : 75 OHMS
- FREQUENCY RANGE : 0-1 GHz
- OPERATING VOLTAGE : 500 VOLTS RMS
- CONTACT RESISTANCE : 3.0 MILLIOHMS MAX.(GOLD)
- DIELECTRIC WITHSTANDING VOLTAGE: 1500 VOLTS RMS
- INSULATION RESISTANCE: 5000 MEGOHMS MIN.

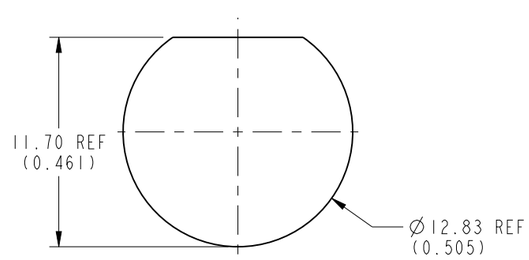

SCALE 3.000

PANEL CUTOUT

NO	DESCRIPTION	MATERIAL	FINISH
6	GROUNDING TERMINAL	COPPER WIRE	TIN
5	MOUNTING POST	BRASS	TIN
4	HOUSING	PBT	
3	INSULATOR	POLYPROPYLENE	NATURAL
2	CENTER CONTACT	PHOS.BRONZE	GOLD
1	BODY	ZINC ALLOY	NICKEL

UNLESS OTHERWISE SPECIFIED, DIMENSIONS ARE IN INCHES AND TOLERANCES ARE:
2 PLACE DECIMAL ±.015 (0,381 mm) | 3 PLACE DECIMAL ±.005 (0,127 mm) | ANGLES ± 1°

NOTICE - These drawings, specifications, or other data (1) are, and remain the property of Amphenol Corp. (2) must be returned upon request; and (3) are confidential and not to be disclosed to any person other than those to whom they are given by Amphenol Corp. The furnishing of these drawings, specifications, or other data by Amphenol Corp., or to any other person to anyone for any purpose is not to be regarded by implication or otherwise in any manner licensing, granting rights or permitting such holder or any other person to manufacture, use or sell any product, process or design, patented or otherwise, that may in any way be related to or disclosed by said drawings, specifications, or other data.

MATERIAL

REFERENCE
TASK# 590

DRAWN CLEMENT	DATE 25-Mar-11	
ENGINEER CLEMENT	DATE 25-Mar-11	
APPROVED	DATE	
CAD FILE	DWG SIZE B	DRAWING NO. 122323

TITLE
TNC LOW PROFILE R/A PCB MOUNT RECEPTACLE IMPEDANCE 75Ω

Amphenol Connex

SCALE: 4.0:1 | SHEET 1 OF 1 | REV A