REV.	DATE	DESCRIPTION
NC	04/28/05	INITIAL RELEASE

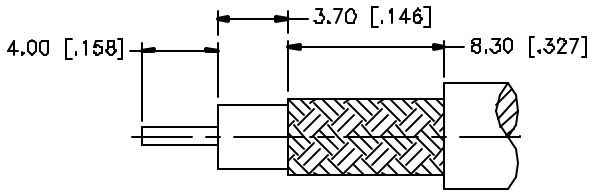

RECOMMENDED CABLE
STRIPPING DIM'S

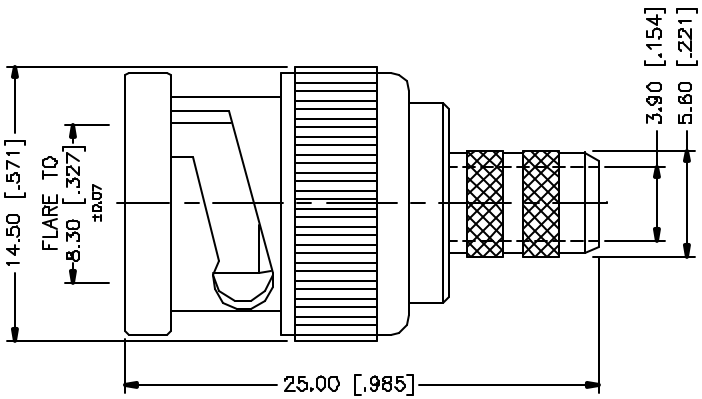

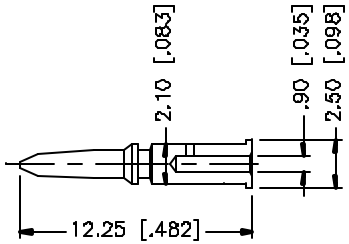

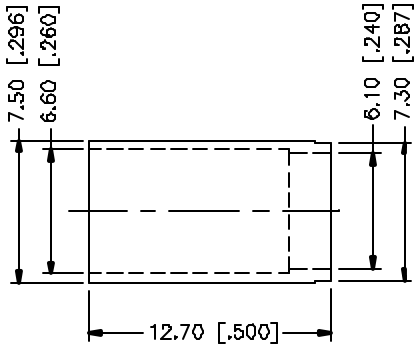

CRIMP NOTES:

1. CRIMPED FERRULE
   HEX CRIMP SIZE .255"
2. CRIMPED CONTACT PIN
   HEX CRIMP SIZE .088"

8				
7				
6				
5				
4	FERRULE	BRASS	NICKEL	1
3	INSULATOR	TEFLON	NATURAL	1
2	CONTACT PIN	PHOS. BRONZE	NICKEL	1
1	HOUSING/BODY	BRASS	NICKEL	1
	DESCRIPTION	MATERIAL	FINISH	QTY

UNLESS OTHERWISE SPECIFIED DIMENSIONS ARE IN MILLIMETERS. DIMENSIONS IN [ ] ARE IN INCHES AND FOR CUSTOMER REFERENCE ONLY.

UNLESS OTHERWISE SPECIFIED TOLERANCES FOR MILLIMETERS ARE:
0.5 – 6mm ± 0.20mm
6 – 30mm ± 0.40mm
30 – 120mm ± 0.50mm

UNLESS OTHERWISE SPECIFIED TOLERANCES FOR INCHES ARE:
.020 – .315 = ± 0.007"
.315 – 1.180 = ± 0.015"
1.180 – 4.724 = ± 0.020"

DO NOT SCALE DRAWING

APPROVALS		DATE
DRAWN	G.R.S.	04/28/05
CHECKED		
ISSUED		
SHEET	1 OF 1	
CAD FILE	C:/112/112728.DWG	

Amphenol Connex

PART DESCRIPTION
BNC CRIMP PLUG – RG59/U 20AWG
FOR B 500 PTE, B 543945 CABLE

PART NO. 112728

DWG. NO. 112728.DWG | REV. NC | SIZE A | SCALE NA