REVISIONS		
ISS	ZONE	DESCRIPTION\PER REQUEST\DATE

THIS DRAWING HAS APPROVED BY:
CUSTOMER SIGNATURE
DATE: 7/19/02

REF. 2002. 7. 18 R&D

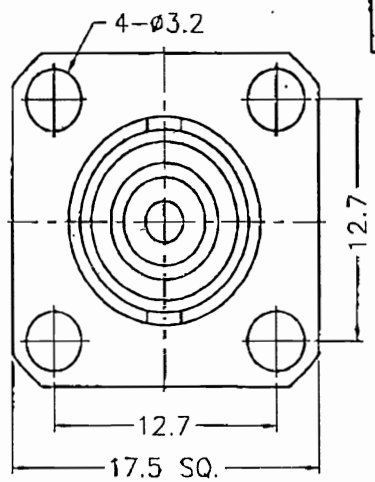

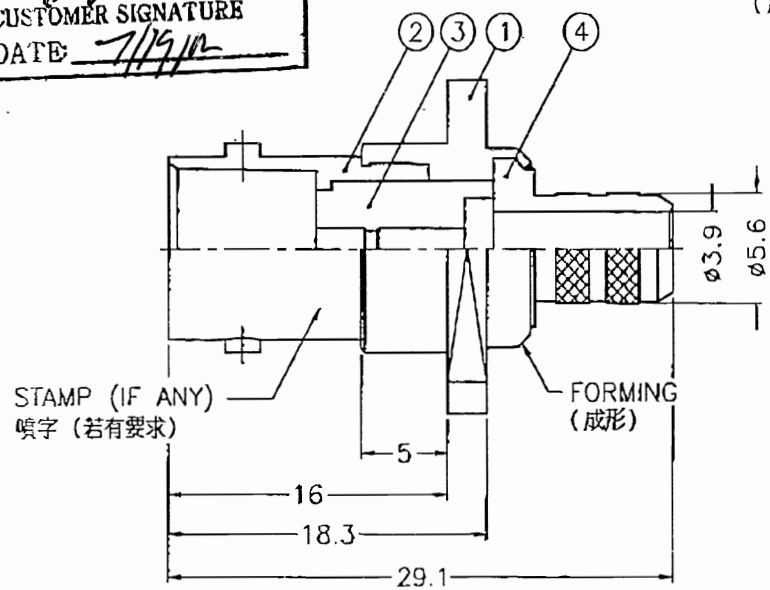

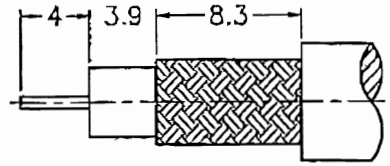

RECOMMENDED
CABLE STRIPPING DIM'S
（建議剝線尺寸）

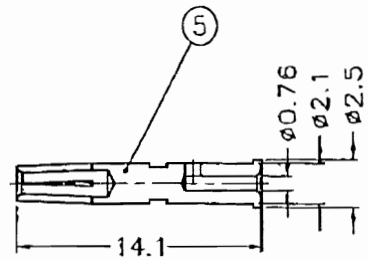

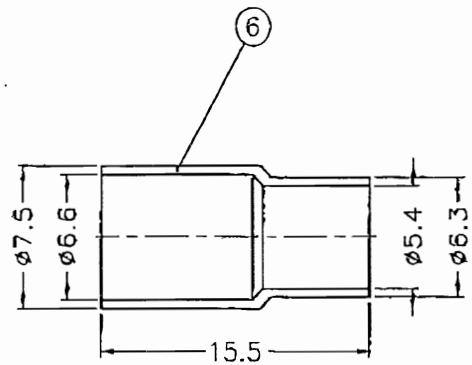

NOTES: FINISH (PLATING THICKNESS IN MICRO-INCHES)
1. BRASS PER QQ-B-626
2. NICKEL PL. 100 MIN. THICK OVER COPPER STRIKE
3. PHOSPHOR BRONZE PER QQ-B-750
4. GOLD PL. 3 MIN. THICK OVER NICKEL PL. 100 MIN. THICK OVER COPPER STRIKE
5. TEFLON MIL-P-19468

1. CRIMPED FERRULE HEX CRIMP SIZE .255"
2. CRIMPED CONTACT PIN HEX CRIMP SIZE .068"

NO.	DESCRIPTION	MATERIAL	FINISH	Q'TY	DRAWING NO.
6	FERRULE	NOTE 1	NOTE 2	1	FR-75/66-63/54 X155
5	CONTACT PIN	NOTE 3	NOTE 4	1	B74000-8-25/076
4	BARREL	NOTE 1	NOTE 2	1	B50900-6-56/39
3	INSULATOR	NOTE 5	NATURAL	1	B74000-3T-75
2	BODY	NOTE 1	NOTE 2	1	B74000-2
1	HOUSING	NOTE 1	NOTE 2	1	B75000-1

DIMENSIONS ARE IN MILLIMETERS
UNLESS OTHERWISE SPECIFIED TOLERANCES
0.5-6 = ±0.2
6-30 = ±0.4
30-120 = ±0.6
120-315 = ±1
315-1000 = ±1.6
1000-2000 = ±2.4

SCALE 2.5/1 | ISSUE A1

PART NO. 112283
APPROVED Kanl.Y DATE 07-16-02'
CHECKED Kanl.Y DATE 07-16-02'
DRAWN ANGELA DATE 07-16-02'
FILE NO. F:\DWG\B\6521C1\59T-75\NT3G

Amphenol - Kai Jack
TAINAN TAIWAN

TITLE
BNC PANEL CRIMP JACK

DRAWING NO.
KJ-B6521C1-NT3G-59T-75

ITEM NO.

P.3
NO.106
18.JUL.2002 19:49