REV.	DATE	DESCRIPTION
NC	11/25/02	INITIAL RELEASE

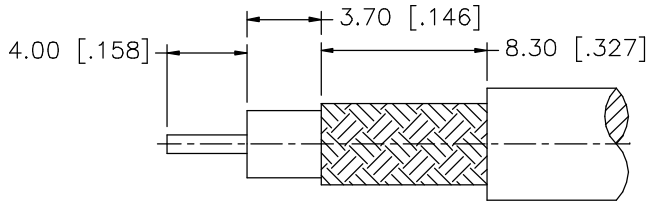

RECOMMENDED CABLE
STRIPPING DIM'S

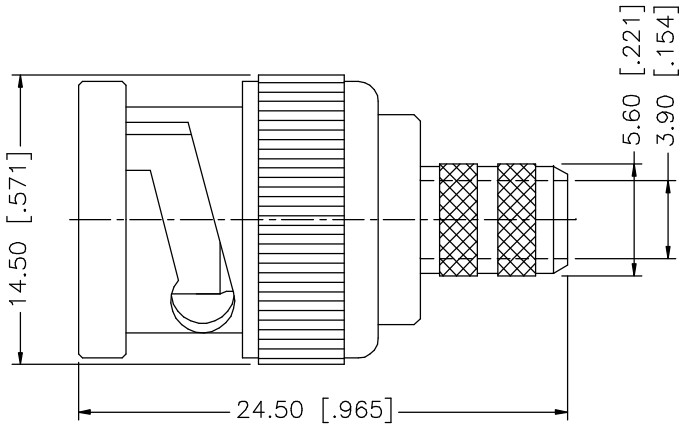

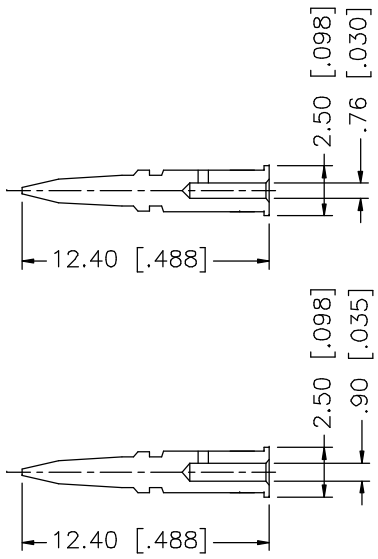

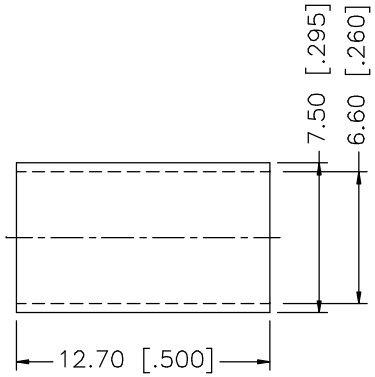

8			
7			
6			
5			
4			
3	CONTACT PIN	BRASS	GOLD
2	INSULATOR	DELRIN	NATURAL
1	SHELL	DIE CAST	NICKEL
	DESCRIPTION	MATERIAL	FINISH

UNLESS OTHERWISE SPECIFIED DIMENSIONS ARE IN MILLIMETERS

DIMENSIONS IN [ ] ARE IN INCHES FOR CUSTOMER REFERANCE ONLY

UNLESS OTHERWISE SPECIFIED TOLERANCES FOR INCHES ARE:

.XXX = ± 0.005"
.XX = ± 0.010"
.X = ± 0.020"

DO NOT SCALE DRAWING

APPROVALS		DATE
DRAWN	G.R.S.	11/25/02
CHECKED		
ISSUED		

Amphenol - Connex
CONNECTOR CORPORATION

TITLE
BNC CRIMP PLUG
(FOR RG-59/U + 59/U 20AWG) 75ohm

SIZE	FSCM NO.	DWG. NO.	REV.
A	99001	112123-11.DWG	NC
SCALE NA	PART NO. 112123-11		SHEET 1 OF 1