REV.	DATE	DESCRIPTION
A	07/07/05	MODIFY I.D. TO 3.1 / ADD CABLE STRIPPING DIMS
B	04/30/06	REVISE CONTACT PIN MATERIAL TO BRASS
C	01/11/07	REVISE BARREL DIA., FERRULE DIA. AND FLANGE LENGTH

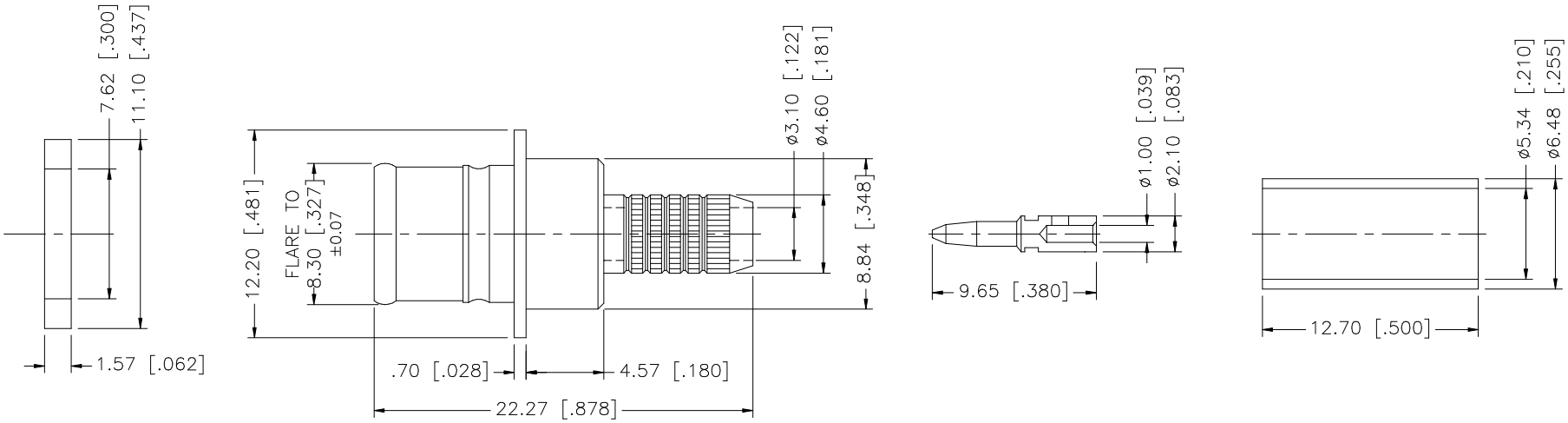

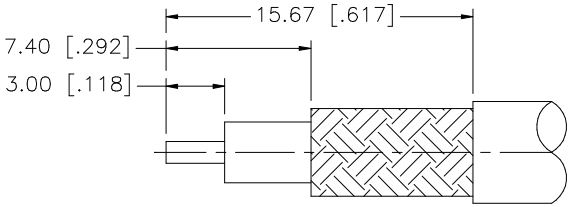

RECOMMENDED CABLE
STRIPPING DIMS.

	DESCRIPTION	MATERIAL	FINISH	QTY
8				
7				
6				
5	FERRULE	COPPER	NICKEL	1
4	CONTACT PIN	BRASS	GOLD	1
3	GASKET	SILICONE	RED	1
2	INSULATOR	TEFLON	NATURAL	1
1	BODY	BRASS	NICKEL	1

UNLESS OTHERWISE SPECIFIED DIMENSIONS ARE IN MILLIMETERS. DIMENSIONS IN [ ] ARE IN INCHES AND FOR CUSTOMER REFERANCE ONLY.

UNLESS OTHERWISE SPECIFIED TOLERANCES FOR MILLIMETERS ARE:
0.5 – 8mm ± 0.20mm
8 – 30mm ± 0.40mm
30 – 120mm ± 0.50mm

UNLESS OTHERWISE SPECIFIED TOLERANCES FOR INCHES ARE:
.020 – .315 = ± 0.007"
.315 – 1.180 = ± 0.015"
1.180 – 4.724 = ± 0.020"

DO NOT SCALE DRAWING

APPROVALS		DATE
DRAWN	G.R.S.	01/11/07
CHECKED		
ISSUED		
SHEET	1 OF 1	

CAD FILE C:/112/112116–12.DWG

Amphenol Connex

PART DESCRIPTION: BNC CRIMP PLUG

PART NO. 112116–12

DWG. NO. 112116–12.DWG | REV. C | SIZE A | SCALE NA