DWG NO.	
227-1448	

A	OFFICIAL ENG.REL TO MFG.	12/4/90	37711	JM/

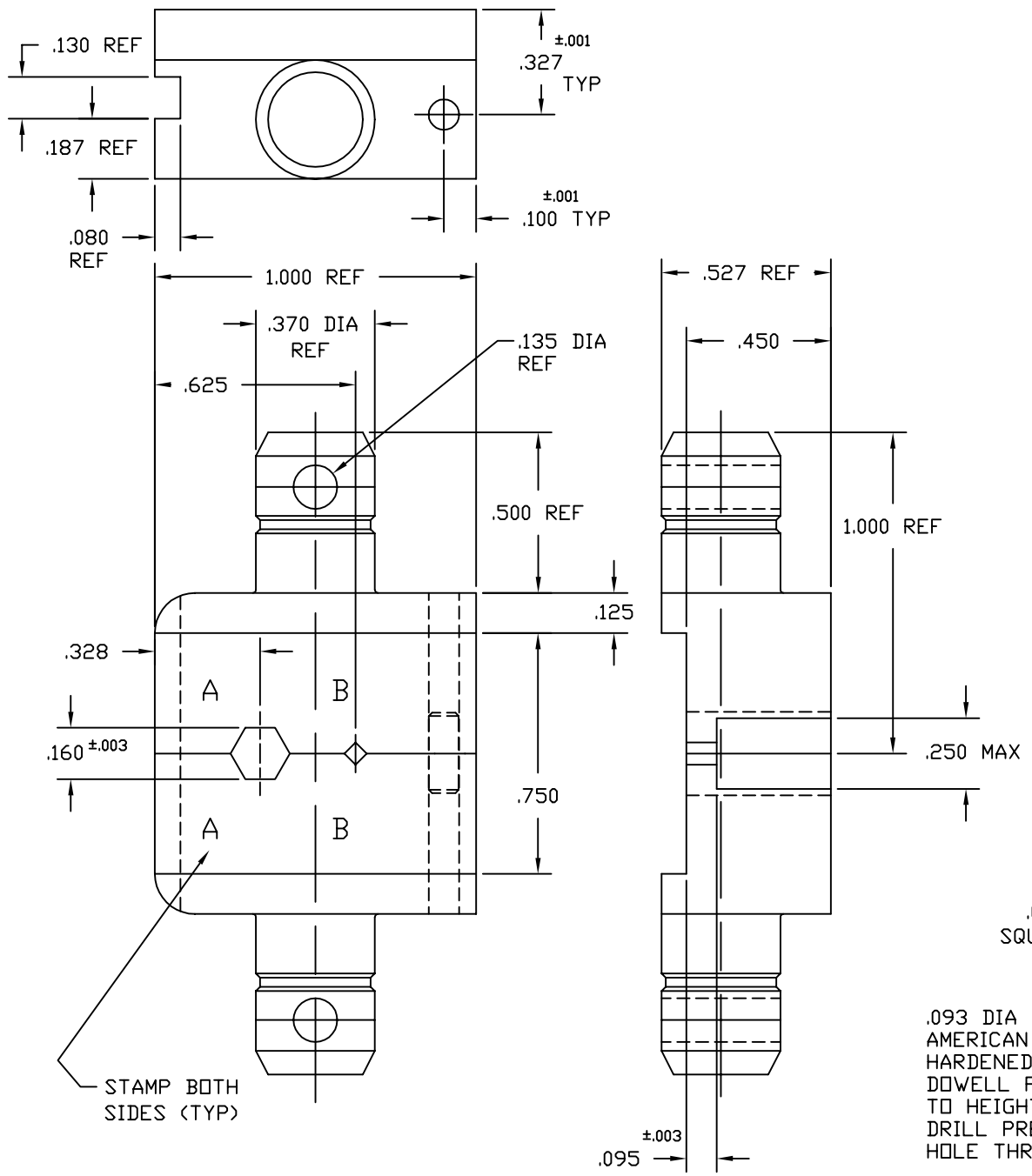

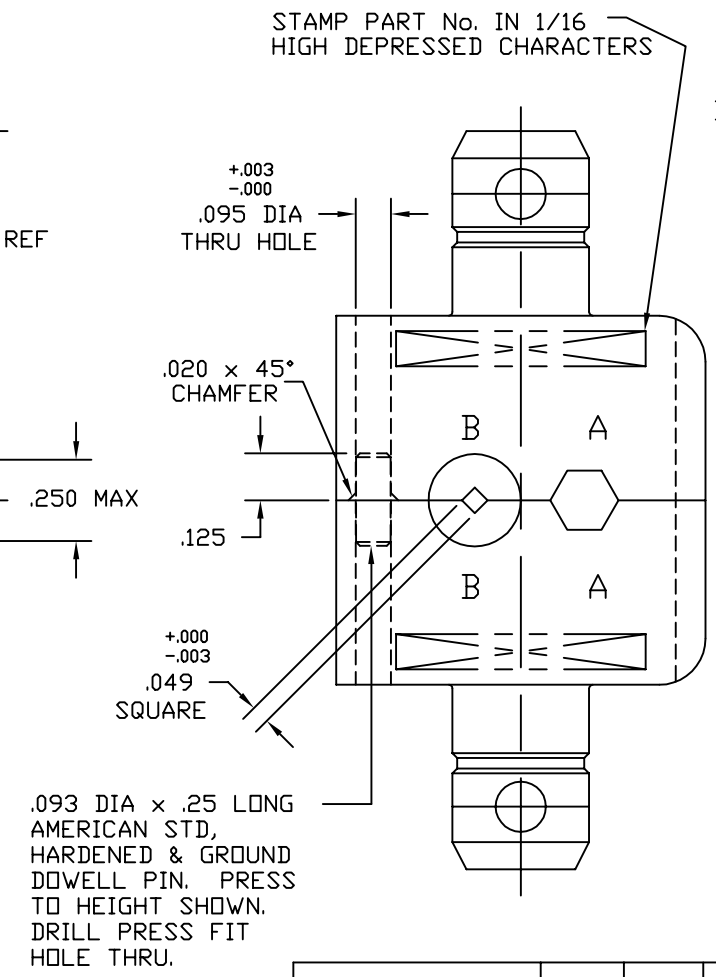

DIMSC SHOULD BE SET TO 3 FOR SMALLER TEXT SIZE.

NOTES:

1. DIES TO BE PACKAGED IN PLASTIC CONTAINERS SUPPLIED BY DANIELS MFG CORP. AMPHENOL PART No. MUST APPEAR ON TOP SIDE OF CONTAINER.
   SIZE: 1-1/4" L x 1-1/4" W x 1-1/4" H.
2. MATERIAL: CRIMPING DIES - TOOL STEEL. HEAT TREAT TO ROCKWELL C52-60.
3. FINISH: ON CRIMPING SURFACES 32 MICROINCHES MAX. BLACK OXIDE COATING PER MIL-C-13924.
4. DIES SHALL BE SUPPLIED WITH APPROPRIATE ROLL PINS.
5. MANUFACTURED BY DANIELS MFG CORP., BLOOMFIELD, MICHIGAN.
6. USED IN CONJUNCTION WITH AMPHENOL TOOL FRAME PART No. 227-944. (DANIELS MFG CORP. TOOL FRAME HX4).
7. DIMENSIONS SHOWN ARE AT FULLY BUTTED CONDITIONS.
8. BASIC DIE DIMENSIONS MUST BE PER MIL-C-22520/5C.

PART NO.						

F:\DEPT611\TOOLS\227\1448

		J. MULVEY	11/27/90	DIE SET
SEE NOTE 2		D. ROYCE	11/29/90	
SEE NOTE 3	EAR 962142-1	D. ROYCE	11/29/90	2:1
		H. FREDLUND	12/4/90	227-1448 A