716-136	REVISIONS				
DRAWING NO.	REV	DESCRIPTION	DATE	ECO	APPR
THIRD ANGLE PROJ.	A	RELEASE TO MFG	12/5/02	44282	CPM

NOTES:

1. MATERIALS & FINISHES:

BODY	- BRASS	- WHITE BRONZE PLATED (.000080 MIN.)
OUTER CONTACT	- PHOSPHOR BRONZE	- WHITE BRONZE PLATED (.000080 MIN.)
CONTACT (ONE PIECE)	- PHOSPHOR BRONZE	- SILVER PLATED (.000230 MIN.)
INSULATOR	- PTFE	
GASKET	- SILICONE RUBBER	

2. PHYSICAL:

A. TEMPERATURE RANGE = -40°C TO +150°C
B. INTERFACE = PER IEC 169-4 & DIN 47223
C. CONTACT RETENTION = AXIAL: 4.0 LBS., RADIAL: N/A

3. ELECTRICAL:

A. IMPEDANCE = 50 OHMS, NOMINAL
B. FREQUENCY RANGE = DC TO 7.5 GHz
C. VSWR = 1.020 + (.02 x FREQ.) FROM DC TO 4.0 GHz
1.300 MAX. FROM 4.0 TO 7.5 GHz
D. IM PERFORMANCE = -163 dBc MAX.
E. D.W.V. = 4,000 VRMS MIN.

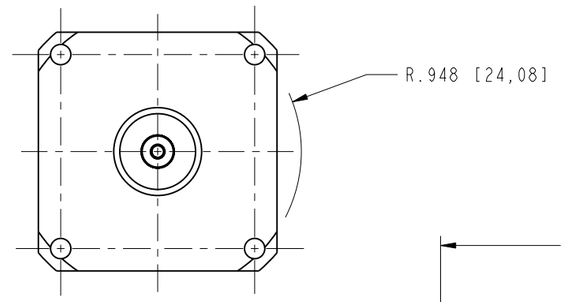

REAR VIEW OF C'BORE
SCALE 1.000

SCALE 0.750

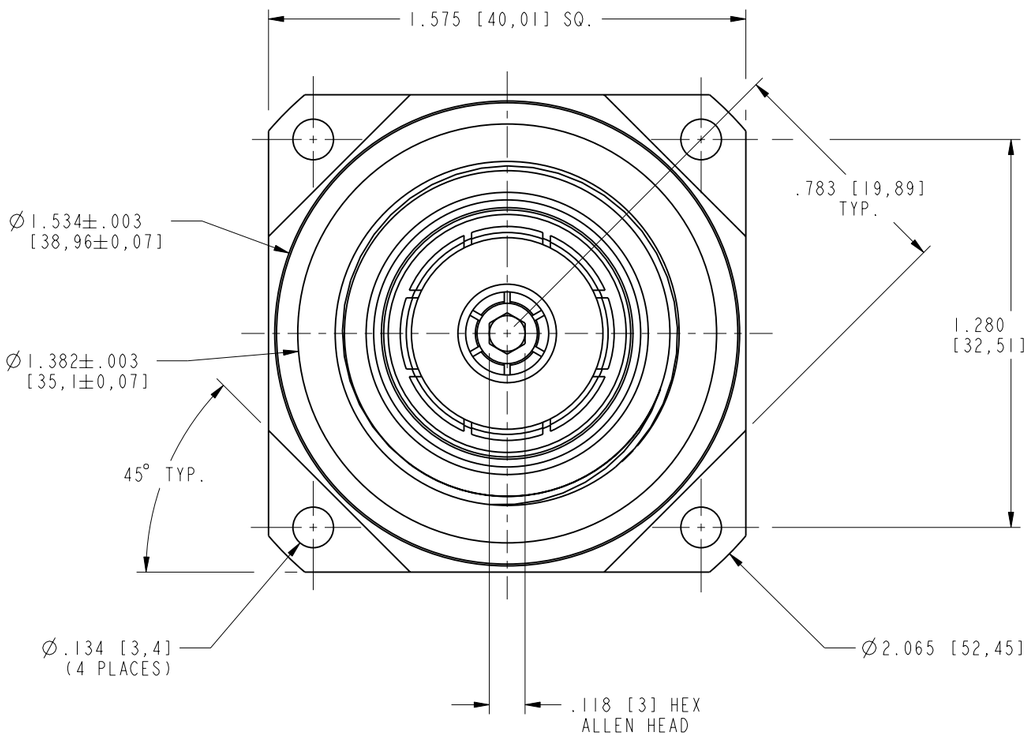

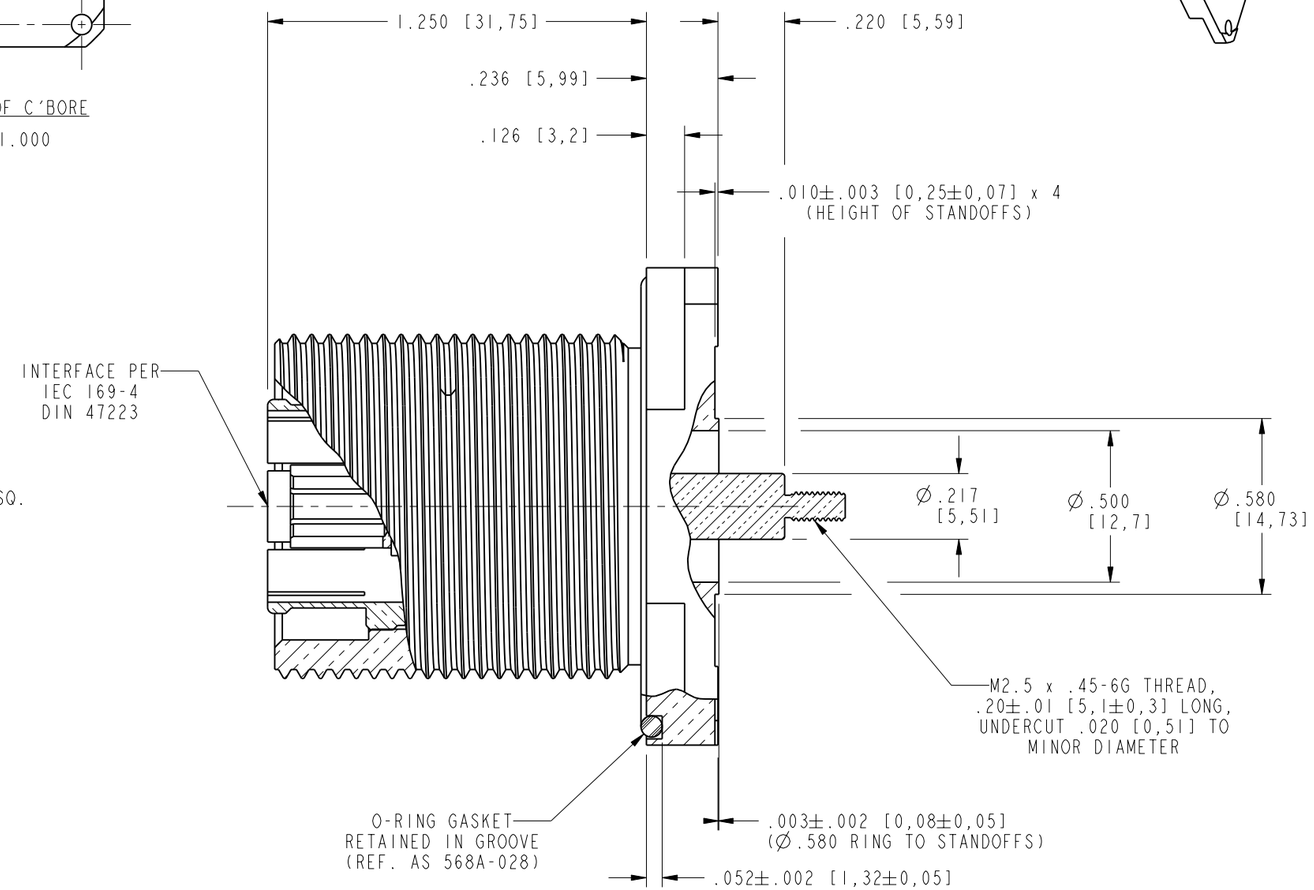

CUSTOMER OUTLINE DRAWING

ALL OTHER SHEETS ARE FOR INTERNAL USE ONLY

UNLESS OTHERWISE SPECIFIED, DIMENSIONS ARE IN INCHES AND TOLERANCES ARE:

2 PLACE DECIMAL	3 PLACE DECIMAL	ANGLES
±.015 (0,381 mm)	±.005 (0,127 mm)	± 1°

NOTICE - These drawings, specifications, or other data (1) are, and remain the property of Amphenol Corp. (2) must be returned upon request; and (3) are confidential and not to be disclosed to any person other than those to whom they are given by Amphenol Corp. The furnishing of these drawings, specifications, or other data by Amphenol Corp., or to any other person to anyone for any purpose is not to be regarded by implication or otherwise in any manner licensing, granting rights or permitting such holder or any other person to manufacture, use or sell any product, process or design, patented or otherwise, that may in any way be related to or disclosed by said drawings, specifications, or other data.

MATERIAL

REFERENCE
611X-4017-200

EAR# 769
GEN# ASSYF52_716

DRAWN C. McGRATH	DATE 11/6/02	TITLE 716 (F) PANEL MOUNT RECEPTACLE
ENGINEER B.C. GLEISSNER	DATE 11/6/02	
APPROVED O. BARTHELMES	DATE 12/4/02	
CAD FILE I:\716\716-136		

Amphenol
Amphenol Corporation
Communication and Network Products Division
Danbury, CT U.S.A. 06810

CODE ID	DWG SIZE	DRAWING NO.	REV
74868	B	716-136	A

SCALE: 2.0:1 | SHEET 2 OF 2