82-6412	REVISIONS				
DRAWING NO.	REV	DESCRIPTION	DATE	ECO	APPR
THIRD ANGLE PROJ.	A	RELEASE TO MFG.	4/13/07	46477	CPM/

NOTES:

1. MATERIALS AND FINISHES:

   BODY, COUPLING NUT & OUTER CONTACT = BRASS (ASTM-B16 H02, C36000), NICKEL PLATING (.000100 MIN THICK)
   CONTACT = BRASS (ASTM-B16 H02, C36000), GOLD PLATING (.000100 MIN THICK.)
   INSULATOR = PTFE PER ASTM D 1710 OR EQUIV.
   GASKET = SILICONE RUBBER
   RETAINER RING = PHOSPHOR BRONZE (ASTM-B139)
   FERRULE = COPPER, NICKEL PLATED (.000100 MIN THICK).

2. ELECTRICAL:
   A. IMPEDANCE: 50 OHM
   B. FREQUENCY RANGE: DC - 11 GHz

3. MECHANICAL:
   A. TEMPERATURE RANGE: -65° C TO +165° C

4. ASTERISK (*) INDICATES CABLE ENTRY DIMENSIONS.

5. CUSTOMER NOTE: CRIMPING CONTACT TO CABLE, CRIMP WITH AMPHENOL TOOL 227-944 & DIE SET 227-1221-57, CAVITY 'B'.

6. PACKAGING:
   A. QUANTITY: SINGLE PACK
   B. MARKING: BAG TO BE MARKED "AMPHENOL, 31-6412, & DATE CODE (WWYY)

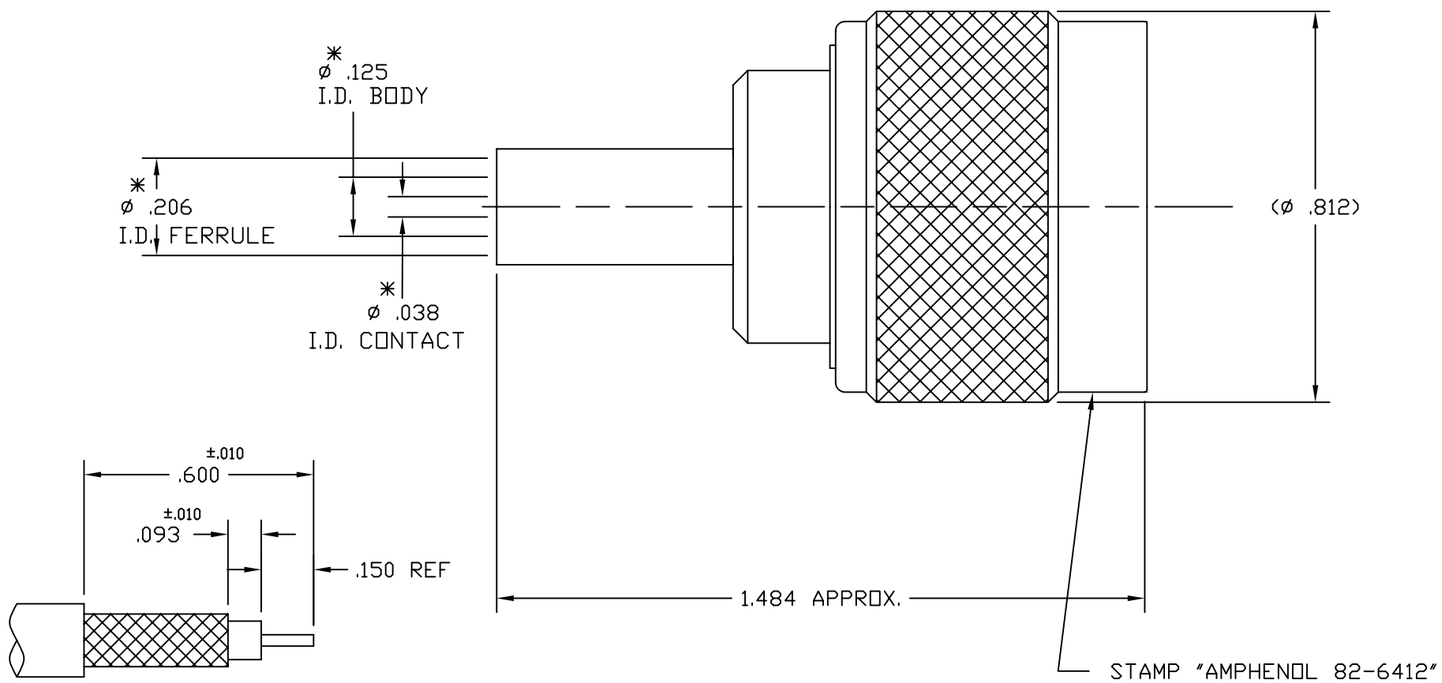

RECOMMENDED CABLE STRIPPING DIM'S

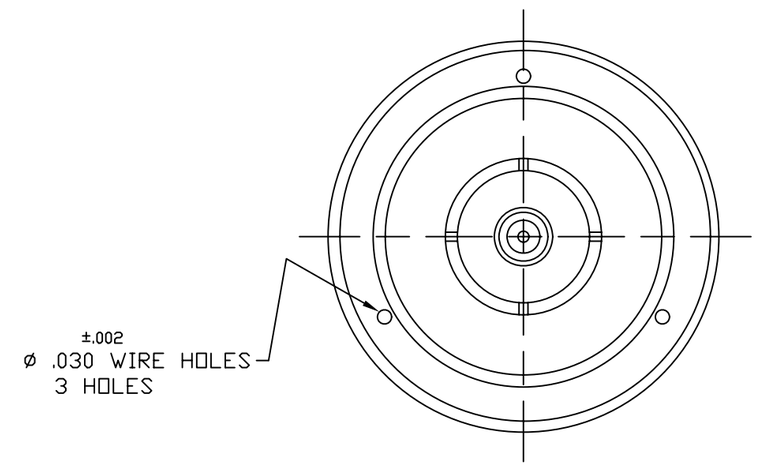

CUSTOMER OUTLINE DRAWING

ALL OTHER SHEETS ARE FOR INTERNAL USE ONLY

UNLESS OTHERWISE SPECIFIED, DIMENSIONS ARE IN INCHES AND TOLERANCES ARE:
2 PLACE DECIMAL ±.015 (0,381 mm) | 3 PLACE DECIMAL ±.005 (0,127 mm) | ANGLES ± 1°

NOTICE – These drawings, specifications, or other data (1) are, and remain the property of Amphenol Corp. (2) must be returned upon request; and (3) are confidential and not to be disclosed to any person other than those to whom they are given by Amphenol Corp. The furnishing of these drawings, specifications, or other data by Amphenol Corp., or to any other person to anyone for any purpose is not to be regarded by implication or otherwise in any manner licensing, granting rights or permitting such holder or any other person to manufacture, use or sell any product, process or design, patented or otherwise, that may in any way be related to or disclosed by said drawings, specifications, or other data.

MATERIAL

REFERENCE

DRAWN	DATE
C. McGRATH	2/13/07
ENGINEER	DATE
H. PARIKH	2/13/07
APPROVED	DATE
M. HOYACK	4/13/07

TITLE: QUICK CRIMP 'N' PLUG FOR RG-141A/U CABLE

Amphenol
Amphenol Corporation
RF/Microwave Operations
Danbury, Conn. U.S.A. 06810

SCALE: 3:1 | SHEET OF

CAD FILE	CODE ID	DWG SIZE	DRAWING NO.	ISSUE
H:\DEPT611\N\082\ASSY\6412SHT2	74868	B	82-6412	A