REVISIONS			
ISS	ZONE	DESCRIPTION\PER REQUEST\DATE	
C	D-6	FKLC20500B WAS FKLC20500A,FKRR00103A WAS FKRR00101A,ø3.55±0.05 WAS ø3.4 MIN. \RD-DM06033101B\31-Mar-06	
D	E-3	ø0.6$^{+0.1}_{-0.05}$ WAS ø0.6\RD-DM07090601E\09-11-07'	
E	A-1	NO.9 WAS CHANGED\RD-DM07101501E\18-Oct-07	
F	E-1	REMOVED CRIMPING INFORMATION ADDED INSULATOR DIMENSION	ECO: 46924

REMARK:1. NO.2 MUST WITHSTAND A 4 lbs. MIN. PUSHOUT FORCE FROM NO.1 AFTER STAKING OPERATION
2. REMARK 1 IS MAINTAINED BY STAMPING THE FOUR POINTS SHOWN ON THE DRAWING WITHOUT PUNCTURING NO.1
(1. 打四點後零件 2 由零件 1 推出至少必須承受 4 磅推力)
(2. 打四點後除需符合備註 1 要求外且不可擊穿零件 1)

1. SEE 349-50713 FOR DETAILED CABLE ASSEMBLY INSTRUCTIONS

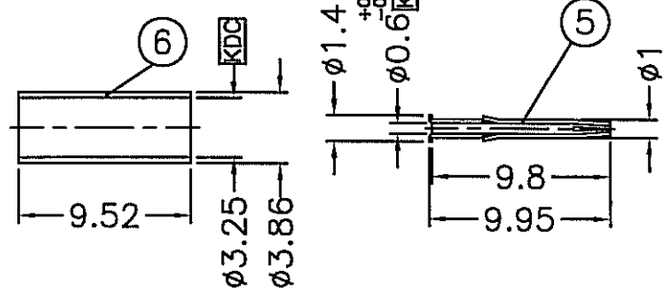

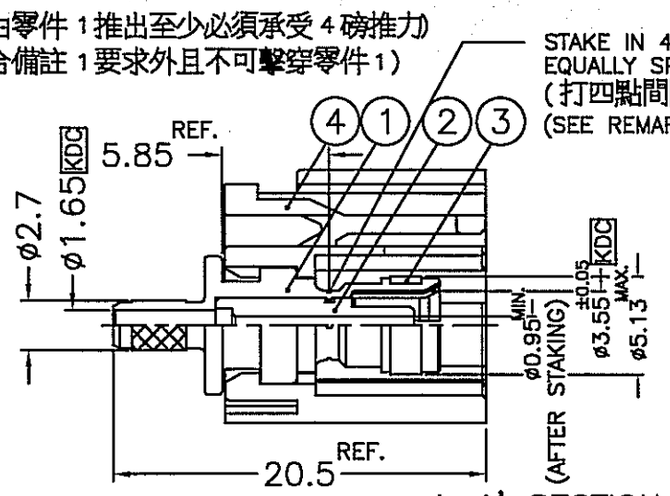

A-A' SECTION
(A-A' 剖面)

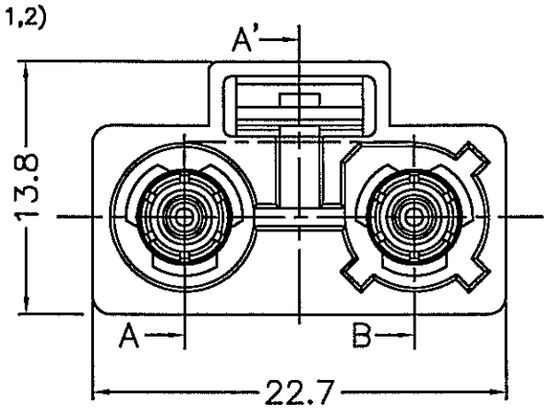

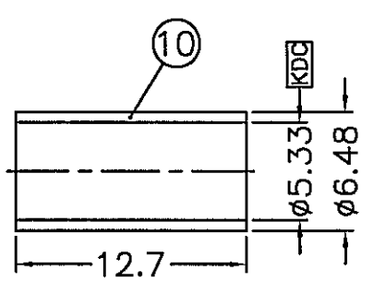

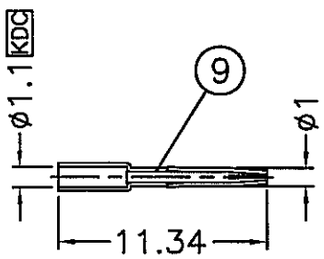

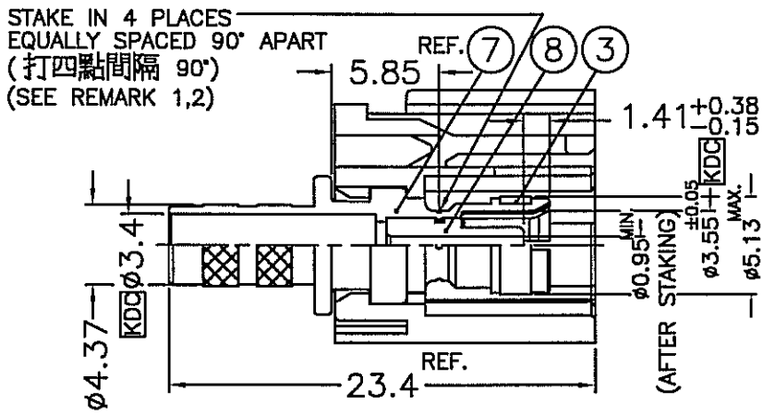

A-B' SECTION
(A-B' 剖面)

TABLE

KEY CODING	PART NO.	DRAWING NO.	ITEM NO.	LOCK COVER
A	2FA2-NASJ-C00-0	FKT6121AW-019-NT30G-50	FK7121AFAA2NC5F	FKLC20501B
B	2FA2-NBSJ-C00-0	FKT6121BW-019-NT30G-50	FK7121AFBA2NC5F	FKLC20502B
C	2FA2-NCSJ-C00-0	FKT6121CW-019-NT30G-50	FK7121AFCA2NC5F	FKLC20503B
D	2FA2-NDSJ-C00-0	FKT6121DW-019-NT30G-50	FK7121AFDA2NC5F	FKLC20504B
E	2FA2-NESJ-C00-0	FKT6121EW-019-NT30G-50	FK7121AFEA2NC5F	FKLC20505B
F	2FA2-NFSJ-C00-0	FKT6121FW-019-NT30G-50	FK7121AFFA2NC5F	FKLC20506B
G	2FA2-NGSJ-C00-0	FKT6121GW-019-NT30G-50	FK7121AFGA2NC5F	FKLC20507B
H	2FA2-NHSJ-C00-0	FKT6121HW-019-NT30G-50	FK7121AFHA2NC5F	FKLC20508B
I	2FA2-NISJ-C00-0	FKT6121IW-019-NT30G-50	FK7121AFIA2NC5F	FKLC20509B
K	2FA2-NKSJ-C00-0	FKT6121KW-019-NT30G-50	FK7121AFKA2NC5F	FKLC20510B
Z	2FA2-NZSJ-C00-0	FKT6121ZW-019-NT30G-50	FK7121AFZA2NC5F	FKLC20511B
L	2FA2-NLSJ-C00-0	FKT6121LW-019-NT30G-50	FK7121AFLA2NC5F	FKLC20512B
M	2FA2-NMSJ-C00-0	FKT6121MW-019-NT30G-50	FK7121AFMA2NC5F	FKLC20513B
N	2FA2-NNSJ-C00-0	FKT6121NW-019-NT30G-50	FK7121AFNA2NC5F	FKLC20514B

CONFIGURATION CONTROL:
NO CHANGES PERMITTED TO DRAWING WITHOUT PPAP QUALIFIED CUSTOMER APPROVAL

NOTES: FINISH (PLATING THICKNESS IN MICRO-INCHES)
1. ZINC DIECAST PER JIS H5301 ZDC2 OR EQUIVALENT
2. PHOSPHOR BRONZE PER QQ-B-750
3. NICKEL PL. 60 MIN. THICK OVER COPPER STRIKE
4. GOLD PL. 30 MIN. THICK OVER NICKEL PL. 100 MIN. THICK OVER COPPER STRIKE
5. TEFLON MIL-P-19468 ; ASTM D-1710 OR EQUIVALENT
6. COPPER PER ASTM B-75 ALLOY C12200 OR EQUIVALENT
7. NYLOY66(WITH 30% GLASS FIBER) PER GINAR TECHNOLOGY CO., LTD. GRADE A0520FN-03 OR EQUIVALENT
8. NICKEL PL. 60 MIN. THICK OVER COPPER PL. 300 MIN. THICK
9. BERYLLIUM COPPER JIS C1720R-1/4H OR EQUIVALENT

NO.	DESCRIPTION	MATERIAL	FINISH	Q'TY	DRAWING NO.
10	FERRULE	NOTE 6	NOTE 3	1	FKFR00201A
9	CONTACT PIN	NOTE 2	NOTE 4	1	FKCP02501
8	INSULATOR	NOTE 5	NATURAL	1	FKNS03802A
7	BODY	NOTE 1	NOTE 8	1	FKBD04701B
6	FERRULE	NOTE 6	NOTE 3	1	FKFR00101A
5	CONTACT PIN	NOTE 2	NOTE 4	1	FKCP01801A
4	LOCK COVER	NOTE 7		1	SEE TABLE
3	RETAINER RING	NOTE 9	NATURAL	2	FKRR00103A
2	INSULATOR	NOTE 5	NATURAL	1	FKNS03902A
1	BODY	NOTE 1	NOTE 8	1	FKBD03001B

DIMENSIONS ARE IN MILLIMETERS

UNLESS OTHERWISE SPECIFIED TOLERANCES
0.5-6 = ±0.2
6-30 = ±0.4
30-120 = ±0.6
120-315 = ±1
315-1000 = ±1.6
1000-2000 = ±2.4

PART NO. 2FA2-NXSJ-C00-0

APPROVED	SCOTT	DATE 31-Mar-05
CHECKED	SCOTT	DATE 31-Mar-05
DRAWN	CISSY	DATE 31-Mar-05

SCALE 2/1 | ISSUE F | FILE NO. F:\DWG\FKT\6121XX\019\50\NT30G-FSZ

Amphenol
Danbury,CT,USA-Tainan,Taiwan-Shenzhen,China

TITLE
FAKRA TWIN SMB CRIMP JACK

DRAWING NO.
FKT6121XX-019-NT30G-50

ITEM NO. FK7121AFXA2NC5F