REV.	DATE	DESCRIPTION
A	12/29/00	MODIFY PLATING TO SILVER
B	12/27/05	MODIFY PLATING TO NEXCOTE / UPDATE DRAWING FORMAT

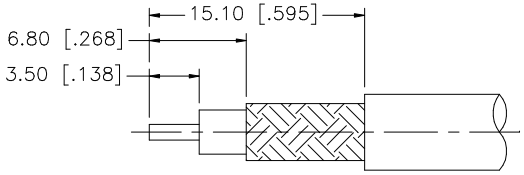

RECOMMENDED CABLE STRIPPING DIM'S

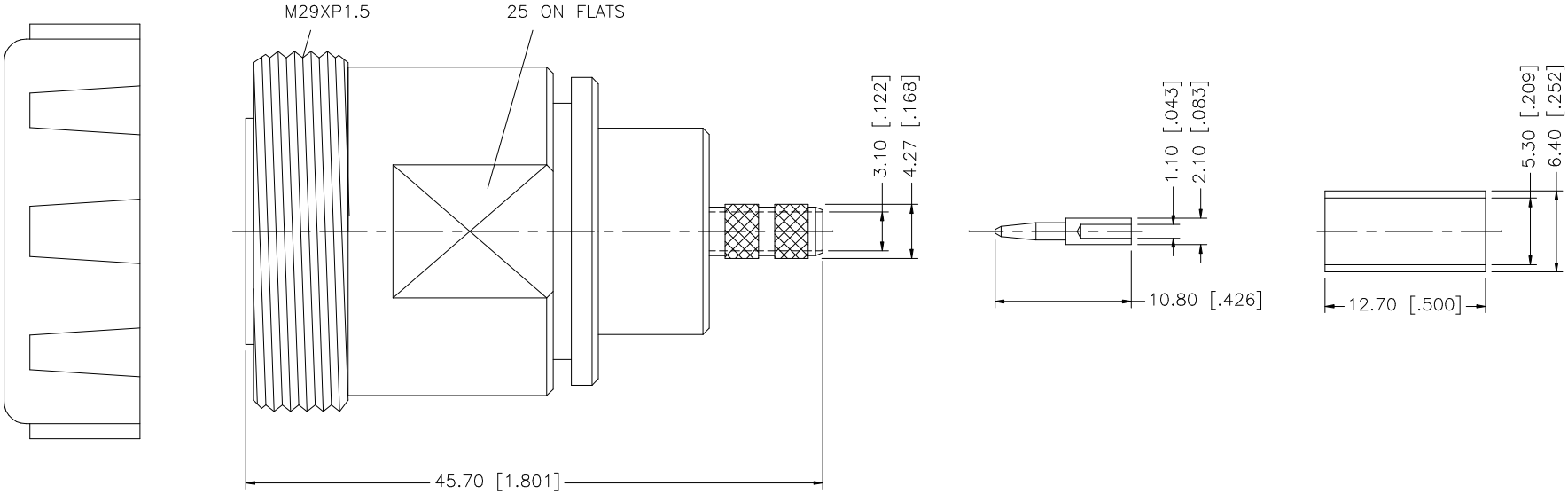

NOTES:

1. CRIMPED FERRULE
   HEX CRIMP SIZE .213"
2. CRIMPED CONTACT PIN
   HEX CRIMP SIZE .068"
   OR CONTACT PIN TO SOLDER

	DESCRIPTION	MATERIAL	FINISH	QTY
8				
7				
6	COVER	P.E.	BLUE	1
5	FERRULE	BRASS	NEXCOTE	1
4	CONTACT PIN	BER. COPPER	SILVER	1
3	INSULATOR	TEFLON	NATURAL	1
2	HOUSING	BRASS	NEXCOTE	1
1	BODY	BRASS	NEXCOTE	1

UNLESS OTHERWISE SPECIFIED DIMENSIONS ARE IN MILLIMETERS. DIMENSIONS IN [ ] ARE IN INCHES AND FOR CUSTOMER REFERANCE ONLY.

UNLESS OTHERWISE SPECIFIED TOLERANCES FOR MILLIMETERS ARE:
0.5 – 8mm ± 0.20mm
8 – 30mm ± 0.40mm
30 – 120mm ± 0.50mm

UNLESS OTHERWISE SPECIFIED TOLERANCES FOR INCHES ARE:
.020 – .315 = ± 0.007"
.315 – 1.180 = ± 0.015"
1.180 – 4.724 = ± 0.020"

DO NOT SCALE DRAWING

APPROVALS		DATE
DRAWN	G.R.S.	12/27/05
CHECKED		
ISSUED		
SHEET	1 OF 1	

CAD FILE C:/272/272140.DWG

Amphenol Connex

PART DESCRIPTION
7/16 CRIMP JACK
(FOR RG-58/U, 58C/U CABLE)

PART NO. 272140

DWG. NO. 272140.DWG | REV. B | SIZE A | SCALE NA