REV.	DATE	DESCRIPTION
A	03/18/03	MODIFY DESCRIPTION

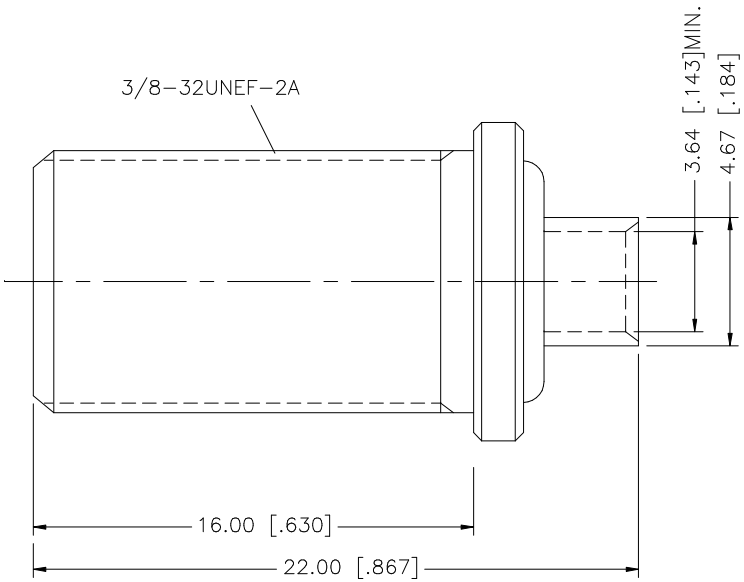

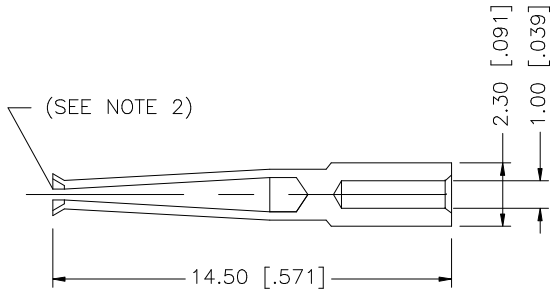

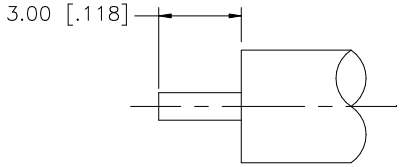

RECOMMENDED CABLE
STRIPPING DIM'S.

NOTES:

1. CONTACT PIN TO SOLDER
2. ACCEPTS ø0.5 [.019] ~ 1.05 [.041] CENTER CONDUCTOR TYPICAL

	DESCRIPTION	MATERIAL	FINISH	QTY
8				
7				
6	FERRULE	BRASS	GOLD	1
5	HEX NUT	BRASS	GOLD	1
4	LOCK WASHER	BRASS	GOLD	1
3	CONTACT PIN	PHOS. BRONZE	GOLD	1
2	INSULATOR	TEFLON	NATURAL	1
1	HOUSING/BODY	BRASS	GOLD	1

UNLESS OTHERWISE SPECIFIED DIMENSIONS ARE IN MILLIMETERS. DIMENSIONS IN [ ] ARE IN INCHES AND FOR CUSTOMER REFERANCE ONLY.

UNLESS OTHERWISE SPECIFIED TOLERANCES FOR MILLIMETERS ARE:
0.5 – 8mm ± 0.20mm
8 – 30mm ± 0.40mm
30 – 120mm ± 0.50mm

UNLESS OTHERWISE SPECIFIED TOLERANCES FOR INCHES ARE:
.020 – .315 = ± 0.007"
.315 – 1.180 = ± 0.015"
1.180 – 4.724 = ± 0.020"

DO NOT SCALE DRAWING

APPROVALS		DATE
DRAWN	G.R.S.	03/18/03
CHECKED		
ISSUED		
SHEET	1 OF 1	

CAD FILE C:/222/222185.DWG

Amphenol Connex

PART DESCRIPTION
F DIRECT SOLDER
(FOR .141" SEMI RIGID CABLE)

PART NO. 222185

DWG. NO. 222185.DWG | REV. A | SIZE A | SCALE NA