REV.	DATE	DESCRIPTION
NC	03/20/03	INITIAL RELEASE

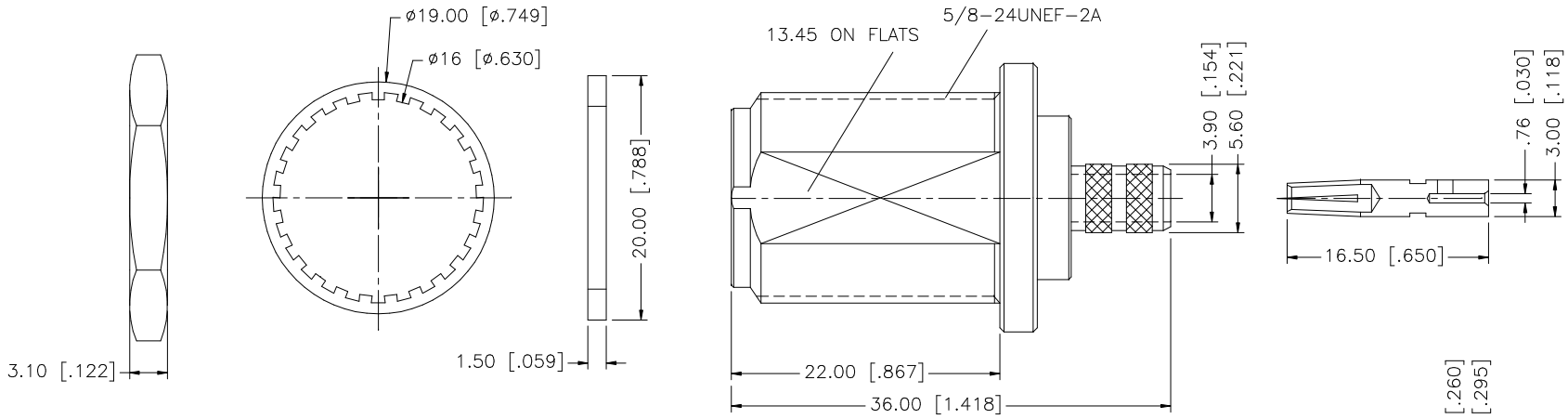

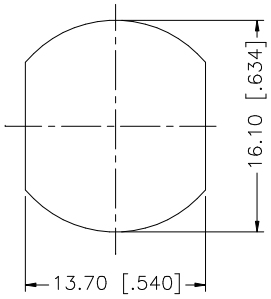

RECOMMENDED MOUNTING HOLE

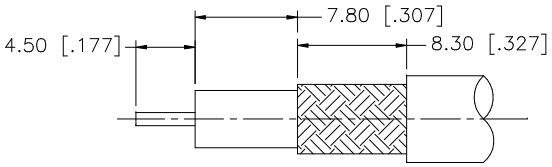

RECOMMENDED
CABLE STRIPPING DIMS.

NOTE:

1. CRIMPED FERRULE
   HEX CRIMP SIZE .255"
2. CONTACT PIN TO SOLDER

	DESCRIPTION	MATERIAL	FINISH	QTY
8	FERRULE	COPPER	NEXCOTE	1
7	CONTACT PIN	PHOS. BRONZE	GOLD	1
6	HEX NUT	BRASS	NEXCOTE	1
5	LOCK WASHER	BRASS	NEXCOTE	1
4	GASKET	SILICONE	RED	1
3	BARREL	BRASS	NEXCOTE	1
2	INSULATOR	TEFLON	NATURAL	1
1	BODY	BRASS	NEXCOTE	1

UNLESS OTHERWISE SPECIFIED DIMENSIONS ARE IN MILLIMETERS. DIMENSIONS IN [ ] ARE IN INCHES AND FOR CUSTOMER REFERANCE ONLY.

UNLESS OTHERWISE SPECIFIED TOLERANCES FOR MILLIMETERS ARE:

0.5 – 8mm ± 0.20mm
8 – 30mm ± 0.40mm
30 – 120mm ± 0.50mm

UNLESS OTHERWISE SPECIFIED TOLERANCES FOR INCHES ARE:

.020 – .315 = ± 0.007"
.315 – 1.180 = ± 0.015"
1.180 – 4.724 = ± 0.020"

DO NOT SCALE DRAWING

APPROVALS		DATE
DRAWN	G.R.S.	03/20/03
CHECKED		
ISSUED		
SHEET	1 OF 1	
CAD FILE	C:/172/172107.DWG	

Amphenol Connex

PART DESCRIPTION: N BULKHEAD CRIMP JACK (FOR 59/U CABLE)

PART NO. 172107

DWG. NO. 172107.DWG | REV. NC | SIZE A | SCALE NA