REV.	DATE	DESCRIPTION
NC	05/30/04	INITIAL RELEASE

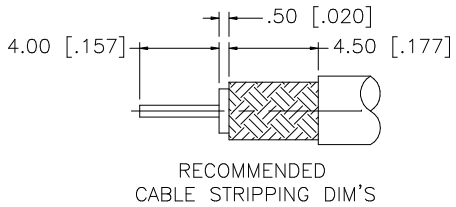

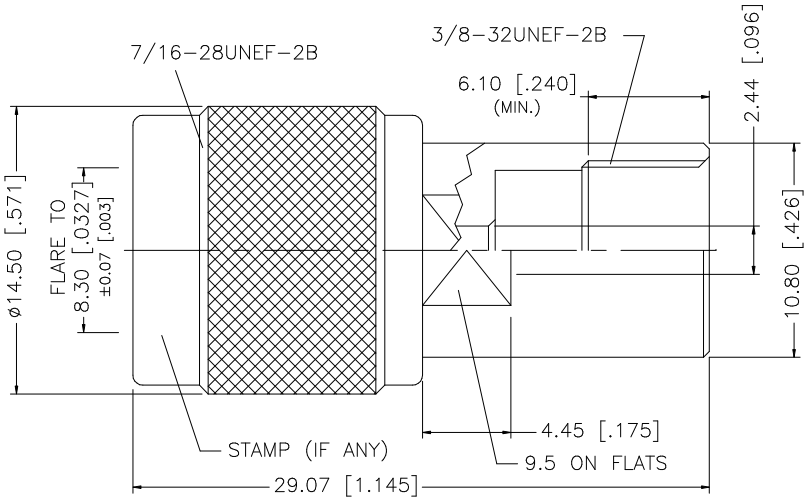

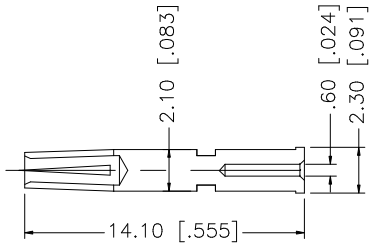

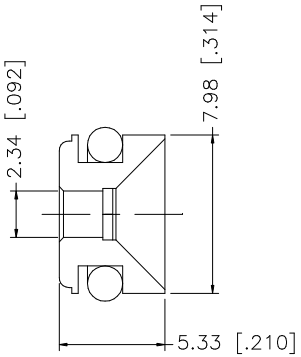

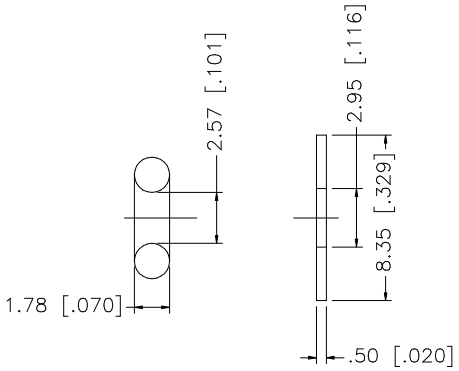

NOTES:

1. CRIMPED CONTACT PIN
   HEX CRIMP SIZE .068"

	DESCRIPTION	MATERIAL	FINISH	QTY
9				
8				
7				
6	WASHER	BRASS	NICKEL	1
5	GASKET	SILICONE	BLACK	2
4	BRAID CLAMP	BRASS	NICKEL	1
3	CONTACT PIN	PHOS. BRONZE	GOLD	1
2	INSULATOR	TEFLON	NATURAL	1
1	BODY	BRASS	NICKEL	1

UNLESS OTHERWISE SPECIFIED DIMENSIONS ARE IN MILLIMETERS. DIMENSIONS IN [ ] ARE IN INCHES AND FOR CUSTOMER REFERANCE ONLY.

UNLESS OTHERWISE SPECIFIED TOLERANCES FOR MILLIMETERS ARE:
0.5 – 8mm ± 0.20mm
8 – 30mm ± 0.40mm
30 – 120mm ± 0.50mm

UNLESS OTHERWISE SPECIFIED TOLERANCES FOR INCHES ARE:
.020 – .315 = ± 0.007"
.315 – 1.180 = ± 0.015"
1.180 – 4.724 = ± 0.020"

DO NOT SCALE DRAWING

APPROVALS		DATE
DRAWN	G.R.S.	05/30/04
CHECKED		
ISSUED		
SHEET	1 OF 1	

CAD FILE C:/122/122497RP-10.DWG

Amphenol Connex

PART DESCRIPTION
TNC REV. POLARITY CLAMP PLUG
(FOR RG-174/U, 188A/U, 316/U CABLE)

PART NO. 122497RP-10

DWG. NO.	REV.	SIZE	SCALE
122497RP-10.DWG	NC	A	NA