REV.	DATE	ITEM	DESCRIPTION
A	01/09/03	1	MODIFY DIA. TO 5.60mm

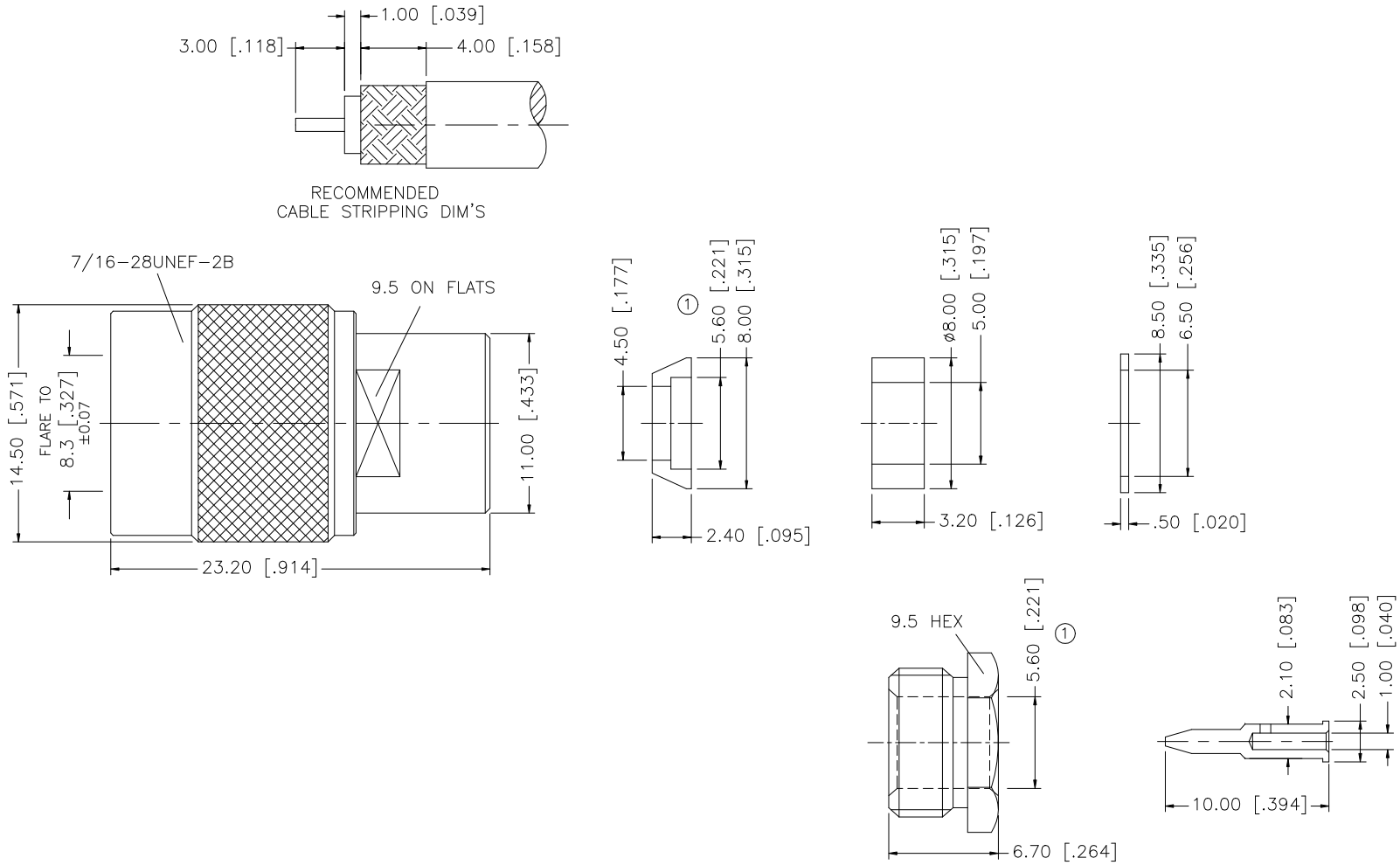

	DESCRIPTION	MATERIAL	FINISH	QTY
8				
7				
6				
5	HEX NUT	BRASS	NICKEL	1
4	GASKET	SILICONE	RED	1
3	INSULATOR	TEFLON	NATURAL	1
2	CONTACT PIN	BRASS	GOLD	1
1	BODY	BRASS	NICKEL	1

UNLESS OTHERWISE SPECIFIED DIMENSIONS ARE IN MILLIMETERS. DIMENSIONS IN [ ] ARE IN INCHES AND FOR CUSTOMER REFERANCE ONLY.

UNLESS OTHERWISE SPECIFIED TOLERANCES FOR MILLIMETERS ARE:

0.5 – 8mm ± 0.20mm
8 – 30mm ± 0.40mm
30 – 120mm ± 0.50mm

UNLESS OTHERWISE SPECIFIED TOLERANCES FOR INCHES ARE:

.020 – .315 = ± 0.007"
.315 – 1.180 = ± 0.015"
1.180 – 4.724 = ± 0.020"

DO NOT SCALE DRAWING

APPROVALS		DATE
DRAWN	G.R.S.	01/09/03
CHECKED		
ISSUED		
SHEET	1 OF 1	
CAD FILE	C:/122/122282T.DWG	

Amphenol Connex

PART DESCRIPTION

TNC CLAMP PLUG
(FOR RG-58C/U, 58/U, 142A/U CABLE)

PART NO. 122282T

DWG. NO. 122282T.DWG | REV. A | SIZE A | SCALE NA