REV.	DATE	DESCRIPTION
NC	04/20/06	INITIAL RELEASE

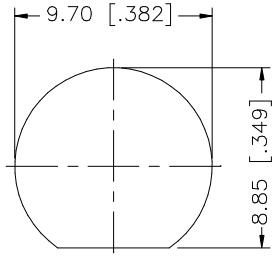

RECOMMENDED
MOUNTING HOLE

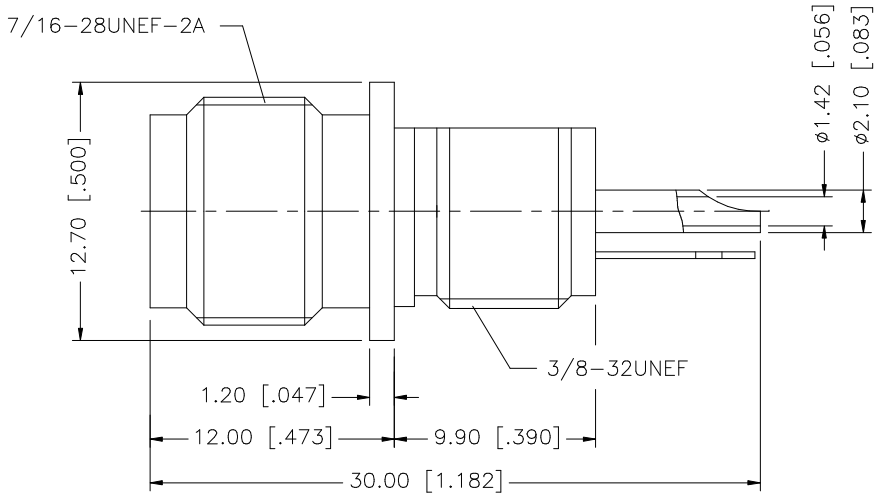

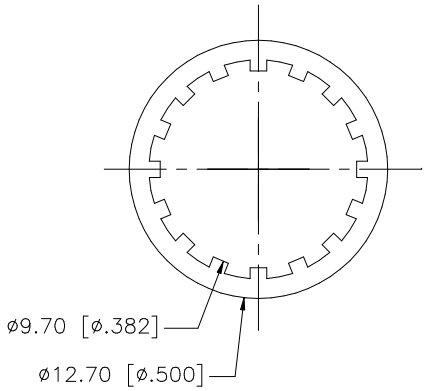

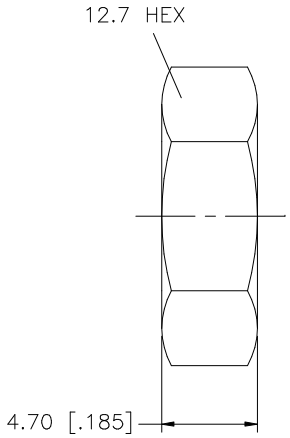

	DESCRIPTION	MATERIAL	FINISH	QTY
8				
7				
6				
5	HEX NUT	BRASS	NICKEL	1
4	LOCK WASHER	BRASS	NICKEL	1
3	CONTACT PIN	PHOS. BRONZE	GOLD	1
2	INSULATOR	TEFLON	NATURAL	1
1	BODY	BRASS	NICKEL	1

UNLESS OTHERWISE SPECIFIED DIMENSIONS ARE IN MILLIMETERS. DIMENSIONS IN [ ] ARE IN INCHES AND FOR CUSTOMER REFERANCE ONLY.

UNLESS OTHERWISE SPECIFIED TOLERANCES FOR MILLIMETERS ARE:
0.5 – 8mm ± 0.20mm
8 – 30mm ± 0.40mm
30 – 120mm ± 0.50mm

UNLESS OTHERWISE SPECIFIED TOLERANCES FOR INCHES ARE:
.020 – .315 = ± 0.007"
.315 – 1.180 = ± 0.015"
1.180 – 4.724 = ± 0.020"

DO NOT SCALE DRAWING

APPROVALS		DATE
DRAWN	G.R.S.	04/20/06
CHECKED		
ISSUED		
SHEET	1 OF 1	

CAD FILE C:/122/122339.DWG

Amphenol Connex

PART DESCRIPTION
TNC BULKHEAD RECEPT. ISOLATED JACK
75ohm

PART NO. 122339

DWG. NO. 122339.DWG | REV. NC | SIZE A | SCALE NA