REV.	DATE	DESCRIPTION
NC	07/25/02	INITIAL RELEASE

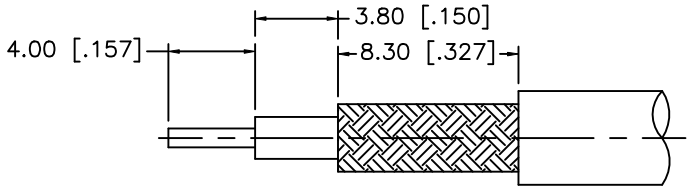

RECOMMENDED
CABLE STRIPPING DIM'S

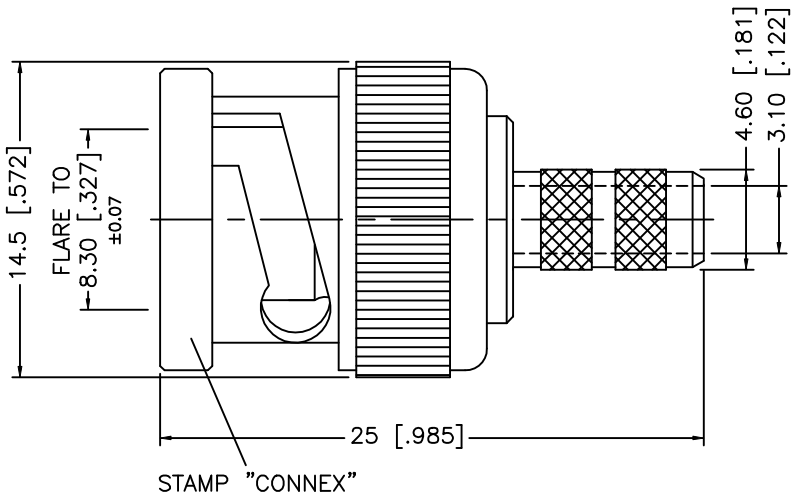

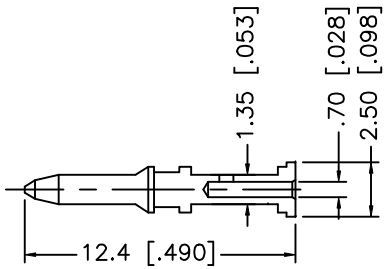

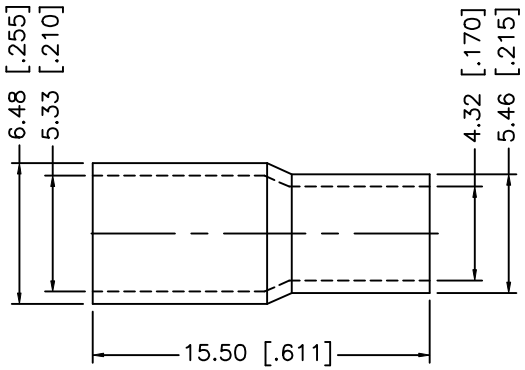

CRIMP NOTES:

1. CRIMPED FERRULE
   HEX CRIMP SIZE .213"
2. CRIMPED CONTACT PIN
   SQ.CRIMP SIZE .043"

8	FERRULE	COPPER	NICKEL
7	CONTACT PIN	BRASS	GOLD
6	GASKET	RUBBER	RED
5	RETAINER RING	BRASS	NICKEL
4	SPRING	SKS	NICKEL
3	WASHER	BRASS	NICKEL
2	INSULATOR	TEFLON	NATURAL
1	BODY/SHELL	BRASS	NICKEL
	DESCRIPTION	MATERIAL	FINISH

UNLESS OTHERWISE SPECIFIED DIMENSIONS ARE IN MILLIMETERS

DIMENSIONS IN [ ] ARE IN INCHES FOR CUSTOMER REFERANCE ONLY

UNLESS OTHERWISE SPECIFIED TOLERANCES FOR INCHES ARE:

.XXX = ± 0.005"
.XX = ± 0.010"
.X = ± 0.020"

DO NOT SCALE DRAWING

APPROVALS		DATE
DRAWN	G.R.S.	07/25/02
CHECKED		
ISSUED		

Amphenol - Connex
CONNECTOR CORPORATION

TITLE: BNC CRIMP PLUG (FOR BELDEN 1855A CABLE)

SIZE	FSCM NO.	DWG. NO.	REV.
A	99001	112955-10.DWG	NC

SCALE	PART NO.	SHEET
NA	112955-10	1 OF 1