REV.	DATE	DESCRIPTION
A	03/10/02	REVISE MOUNTING PIN LENGTH
B-1	03/31/05	CORRECT TO .095" LEGS

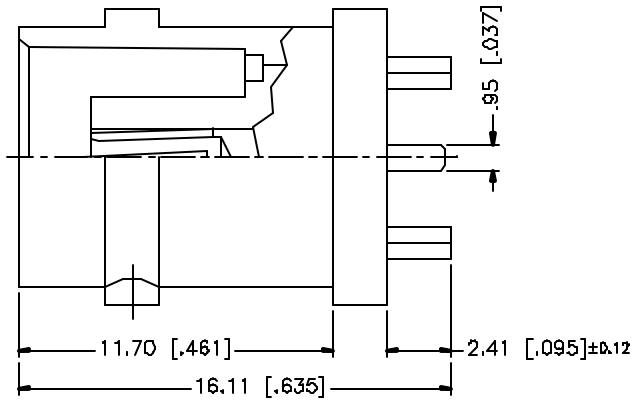

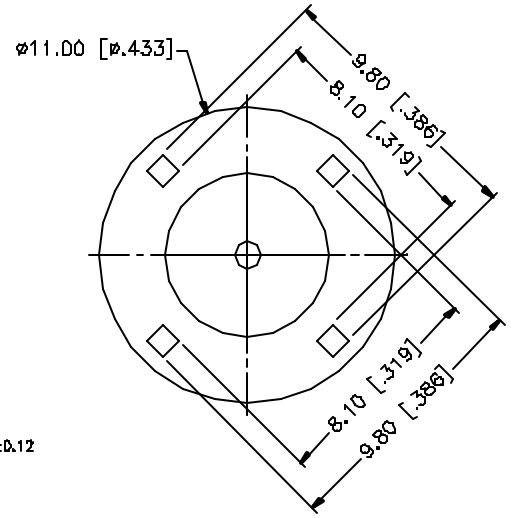

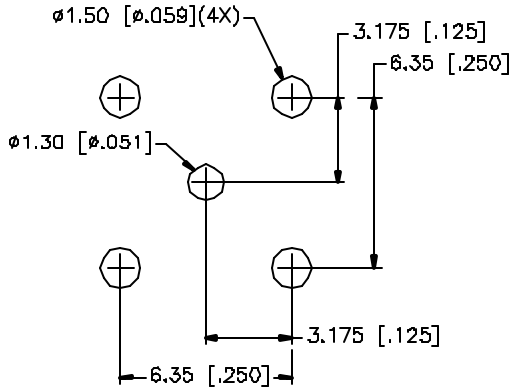

PCB MOUNTING HOLE

4	LOCK RING	BRASS	NICKEL	1
3	CONTACT PIN	PHOS. BRONZE	GOLD	1
2	INSULATOR	TEFLON	NATURAL	1
1	BODY	BRASS	NICKEL	1
	DESCRIPTION	MATERIAL	FINISH	QTY

UNLESS OTHERWISE SPECIFIED DIMENSIONS ARE IN MILLIMETERS. DIMENSIONS IN [ ] ARE IN INCHES AND FOR CUSTOMER REFERENCE ONLY.

UNLESS OTHERWISE SPECIFIED TOLERANCES FOR MILLIMETERS ARE:

0.5 – 8mm ± 0.20mm
8 – 30mm ± 0.40mm
30 – 120mm ± 0.50mm

UNLESS OTHERWISE SPECIFIED TOLERANCES FOR INCHES ARE:

.020 – .315 = ± 0.007"
.315 – 1.180 = ± 0.015"
1.180 – 4.724 = ± 0.020"

DO NOT SCALE DRAWING

APPROVALS		DATE
DRAWN	G.R.S.	03/31/05
CHECKED		
ISSUED		
SHEET	1 OF 1	
CAD FILE	C:/112/112405-10.DWG	

Amphenol Connex

PART DESCRIPTION: BNC P.C. MOUNT RECEPT. JACK .095" LEGS

PART NO. 112405-10

DWG. NO. 112405-10.DWG | REV. B-1 | SIZE A | SCALE NA